Stainless steel cylinders ISO 6432

from page 5.1.1

Stainless steel cylinders ISO 15552

from page 5.5.1

Stainless steel piston rod accessories

from page 5.20.1

Stainless steel mounting accessories for cylinders ISO 6432

from page 5.30.1

Stainless steel mounting accessories for cylinders ISO 15552

from page 5.40.1

Stainless steel ball valves

from page 5.100.1

Stainless steel uni-directional valves

from page 5.105.1

Stainless steel quick exhaust valves

from page 5.110.1

Stainless steel push-in fittings series RX

from page 5.150.1

Stainless steel rapid fittings series CX

from page 5.155.1

Stainless steel compression fittings series OX

from page 5.160.1

Stainless steel standard fittings series AX

from page 5.165.1

Stainless steel quick-lock cuplings

from page 5.170.1

Stainless steel swivel joints

from page 5.175.1

Stainless steel air-reservoirs

from page 5.180.1

Stainless steel flow controls

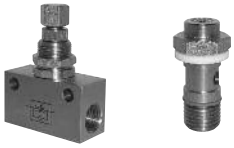

from page 5.185.1

Stainless steel silencers and silenced exhaust restrictors

from page 5.190.1

Notes

Stainless Steel cylinders ISO 6432

Bores from 16 to 25 mm *Double acting*

Standard executions		
Version	Symbol	Type
Magnetic	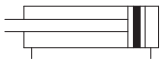	MDMX
Magnetic with adjustable cushionings (from bore 20 to 25 mm)	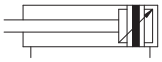	MDMAX

On request, they can be supplied according Directive 94/9/EC - **ATEX**
CE Ex **II 2 GDc T5**

Series of stainless steel cylinders conforming to ISO 6432 standards.
The heads are connected with the tube through rolling; this guarantees perfect fit.
The cushionings are in nitrile rubber to relieve the impact of the piston.
One or more magnetic reed switches can be applied to the magnetic type.
For the magnetic reed switches type ASV see from page 1.110.1.
For mounting accessories see from page 5.30.1.
For rod clevis see from page 5.20.1.

Options		Suffix
Through rod		P
Seals FKM	max 150°	V
Special versions on request		/ S

The options can be combined (when this is possible).

How to order: 20/50 MDMXP

20	/	50	MDMX	P
Bore	/	Stroke	Type	Option

Technical data		
Fluid	Compressed filtered air with or without lubrication. Lubrication, if be used, must be continous.	
Pressure	max 10 bar	
Temperature range	-20 °C ÷ + 80°C	
Materials	Heads:	Stainless steel AISI 316
	Barrel:	Stainless steel AISI 304
	Rod:	Stainless steel AISI 316
	Seal:	Polyurethane - Bronze bushing: Sintered bronze - Piston: brass

Bore (mm)	Standard strokes (mm)	Maximum stroke (mm)
16	10, 25, 50, 80 100, 125, 160 200, 250, 320, 400, 500	1000
20		
25		

See page 1.1.3 to calculate the cylinder force.
Seal kits not available for these cylinders.

5

Stainless Steel cylinders ISO 6432

Bores from 16 to 25 mm *Double acting*

Type: **MDMX-MDMAX**

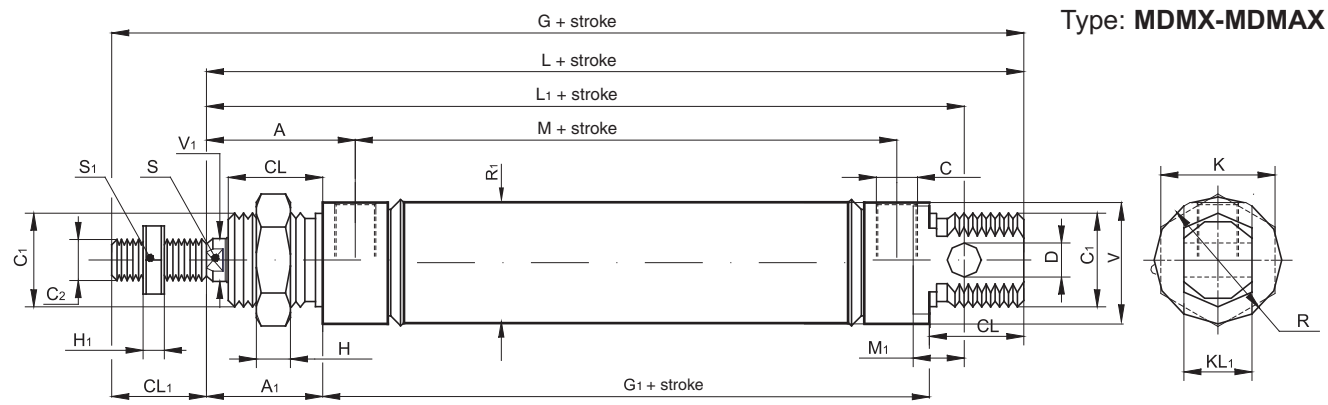

ø mm	C_2	V_1	C_1	R	KL_1	R_1	V	D	CL_1	L_1	L	M	G_1	A_1	CL	A	M_1	S	C	G	K	H	H_1	S_1
16	M6	6	M16x1,5	20	12	17,27	19	6	16	82	96	46	56	22	18	27	9	5	M5	112	24	8	3	10
20	M8	8	M22x1,5	27	16	21,27	25,5	8	20	95	111	51	67	24	20	32	12	7	1/8”	131	27	8	4	13
25	M10x1,25	10	M22x1,5	30	16	26,5	28	8	22	104	118	52	67	29	22	37	12	9	1/8”	140	27	8	6	17

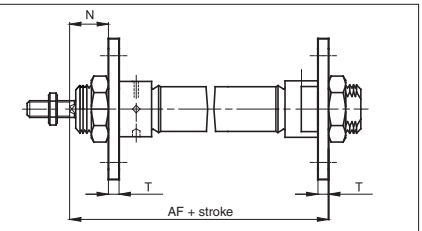

Flange

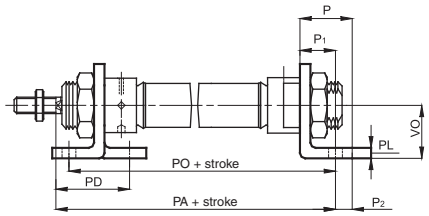

High foot

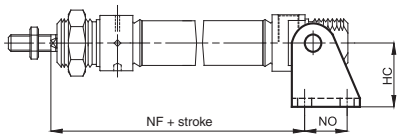

Rear clevis

Type: **MDMXP-MDMAXP**

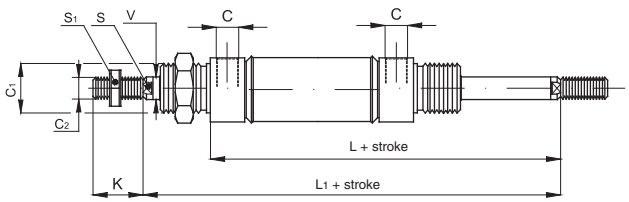

ø mm	L	L_1	C	C_1	C_2	S	S_1	V	K
16	74,5	96,5	M5	M16x1,5	M6	5	10	6	16
20	92	116	1/8”	M22x1,5	M8	7	13	8	20
25	97	125	1/8”	M22x1,5	M10x1,25	9	17	10	22

ø mm	AF	HC	P	P_1	P_2	PA	PD	PL	PO	T	VO	N
16	82	27	20	14	6	92	32	4	84	4	20	18
20	97	30	25	17	8	109	36	5	102	5	25	19
25	102,5	30	25	17	8	114,5	40	5	103,5	5	25	23

For dimensions and codes of the accessories see page 5.30.1

Stainless Steel Cylinders ISO 15552

Bores from 32 to 200 mm *Double acting*

Standard executions		
Version	Symbol	TYPE
MAGNETIC STANDARD	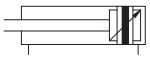	AMX

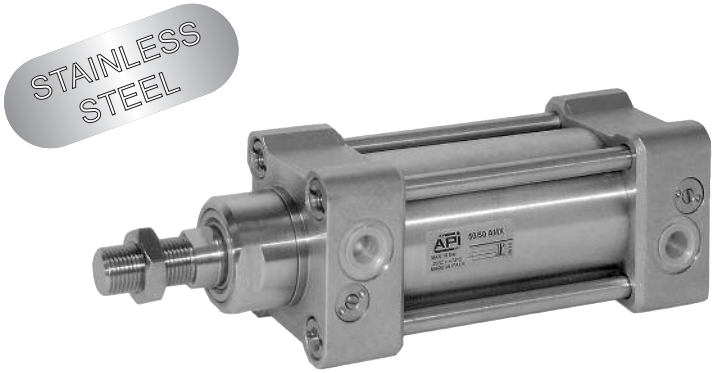

For the magnetic reed switches type ASV see from page 1.110.1.
For coupling cylinders/reed swiches/brackets see table on page 1.120.5
For mounting accessories see from page 5.40.1
For rod accessories see from page 5.20.1.

On request, they can be supplied according Directive 94/9/EC - **ATEX**
CE Ex **II 2 GDc T5**

New series of stainless steel 316 L cylinders conforming to ISO15552.
Round tube and external tie-rods, standard with adjustable cushionings.
Scraper ring in polyurethane specially developed for chemical and food industries.
The main features of this cylinder are the “clean” modern design and the attention to details.
A particular attention has been given to the manufacture of the end caps; there are no external casting cavities, thus eliminating contamination traps.
In order to facilitate the replacement of the piston rod seal the nose has been developed for simple maintenances also on cylinders still mounted on a machine.

Options		Sigla
Through rod (page 5.5.4)		P
Seals FKM max 150°C	(scraper ring only = V1)	V
Tandem forward movement piston rods coupled together	(page 5.5.5)	TA1
Tandem forward movement piston rods independent	(page 5.5.5)	TA2
Tandem back to back	(page 5.5.5)	TA3
Tandem front to front	(page 5.5.5)	TA4
Extended rod (indicate the requested WH dimension in mm. E.g.: WH -100).		WH-...
Without adjustable cushionings		D
Adjustable rear cushioning only		D1
Adjustable front cushioning only		D2
Special male thread (indicate the requested thread. E.g. : R-M 10x1,5). The dimension AM of the special thread will be the same as the standard. The cylinder will be supplied without rod nut.		R-M...
Female thread; for dimensions see page 5.5.4		F
With bellows for protection of the rod (in this case the dimension WH will be extended according the stroke of the cylinder)		Z
Special on request		/S

The options can be combined (when this is possible).
The suffix of the options are to be added to the model number of the standard product, as shown in the following table.
How to order: 63 / 100 AMXPVR-M12x1,25

63	/	100	AMX	P	V	R-M12X1,25
Bore	/	Stroke	Type	Option	Option	Option

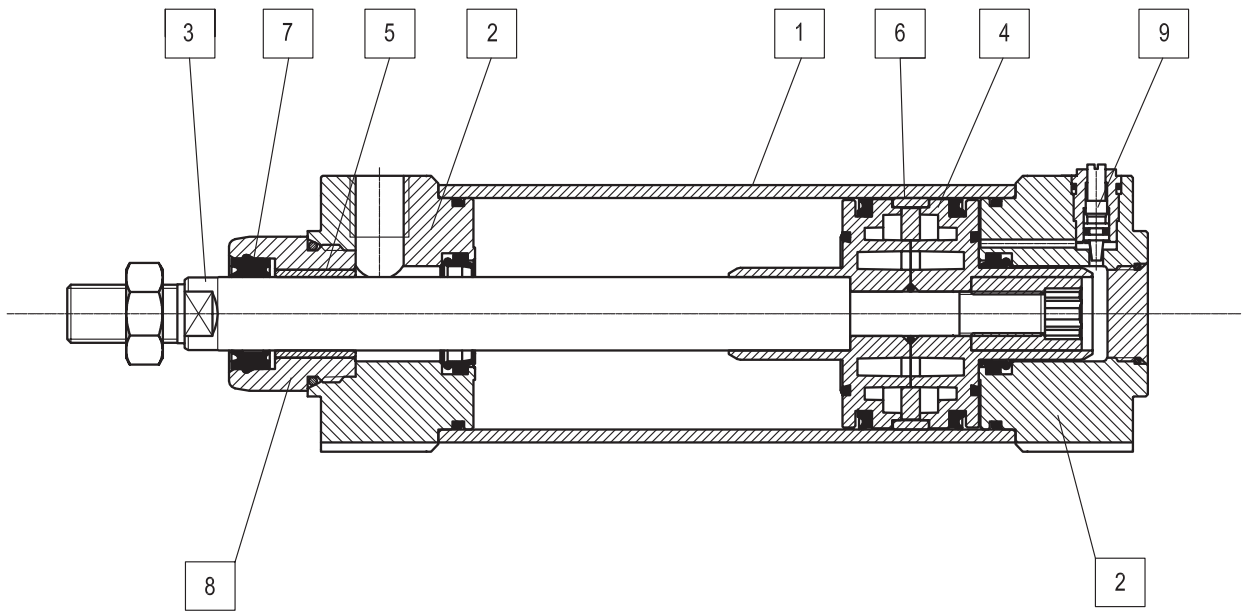

Materials (standard types)	
1 Tube and tie-rods	Stainless steel AISI 316L
2 Heads	Stainless steel AISI 316L
3 Rod	Stainless steel AISI 316L, lapped
4 Piston	Die-cast aluminium
5 Bushing	Self-lubricating sintered bronze
6 Guide ring	Natural Delrin
7 Rod seals	Special polyurethane
8 Disassembling nose	Stainless steel AISI 316L
9 Group cushioning screw	Stainless steel AISI 316L
Other seals	Nitrile rubber NBR/polyurethane

Technical data										
Bore (mm)		32	40	50	63	80	100	125	160	200
Fluid		Compressed filtered air with or without lubrication. Lubrication, if be used, must be continous.								
Pressure range		0,5 ÷ 10 bar								
Temperature range		-20 °C ÷ +80 °C								
Stroke		from 10 mm to 2500 mm								
Cushion lenght		20	22	25	25	35	35	35	48	48
Ports		1/8”	1/4”		3/8”		1/2”		3/4”	
Rod thread		M10 x 1,25	M12 x 1,25	M16 x 1,5		M20 x 1,5		M27 x 2	M36 x 2	
Weight	Stroke zero (g)									
	Additional 10 mm stroke (g)									

type: **AMX**

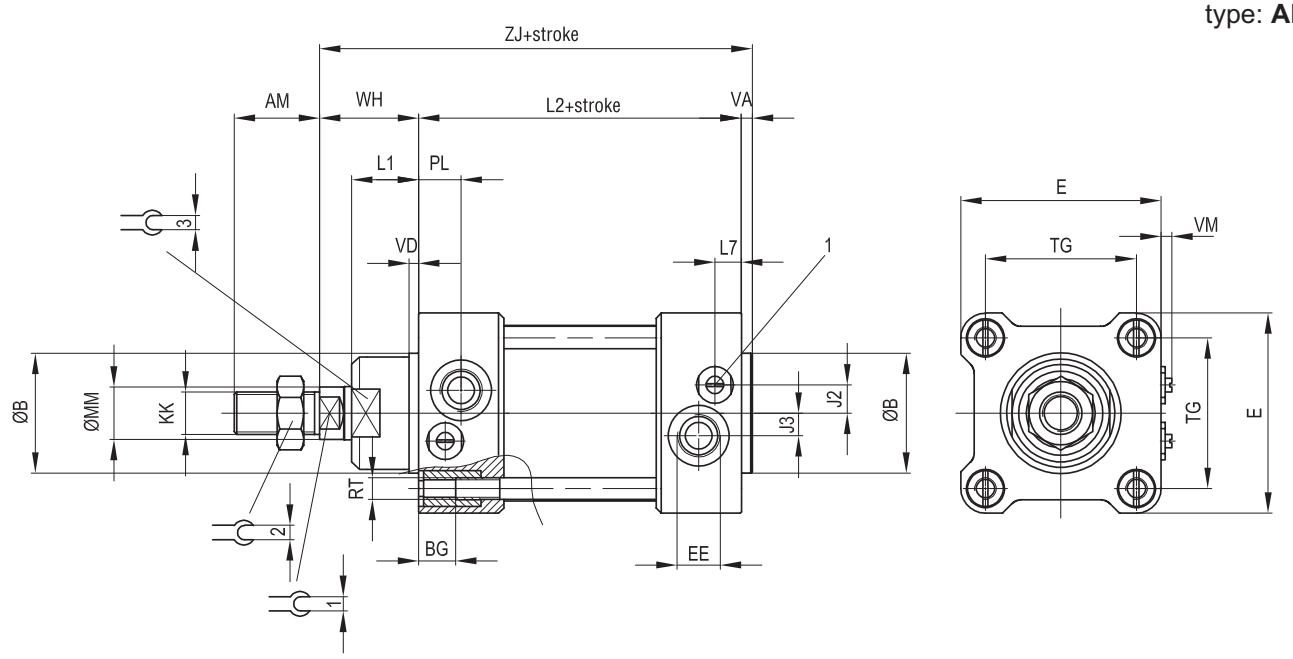

Ø (mm)	AM	B Ø d11	BG	E	EE	J2	J3	KK	L1	L2
32	22	30	11	47	$G^{1/8}$	6,5	5,5	M10x1,25	20	94
40	24	35	11	52	$G^{1/4}$	8	6	M12x1,25	22	105
50	32	40	13	65	$G^{1/4}$	9,5	7,5	M16x1,5	26	106
63	32	45	13	75	$G^{3/8}$	11,5	8,5	M16x1,5	25	121
80	40	45	15	95	$G^{3/8}$	10,5	9,5	M20x1,5	32	128
100	40	55	15	115	$G^{1/2}$	15	10	M20x1,5	38	138
125	54	60	17	140	$G^{1/2}$	15	10	M27x2	40	160
160	72	65	24	180	$G^{3/4}$	15	15	M36x2	50	180
200	72	75	24	220	$G^{3/4}$	15	15	M36x2	65	180

Ø (mm)	L7	MM Ø f7	PL	RT	TG	VA	VD	WH	ZJ	1	2	3
32	18	12	14	M6	32,5	4	4	26	124	10	17	27
40	20	16	15	M6	38	4	4	30	139	13	19	32
50	20	20	15	M8	46,5	4	4	37	147	17	24	36
63	10	20	16	M8	56,5	4	4	37	162	17	24	38
80	13,5	25	20,5	M10	72	4	4	46	178	22	30	42
100	13	25	20	M10	89	4	4	51	193	22	30	50
125	33	32	27	M12	110	5	5	65	230	27	41	52
160	32	40	25	M16	140	6	8	80	266	36	55	60
200	34	40	25	M16	175	6	8	95	281	36	55	70

type: **...P**

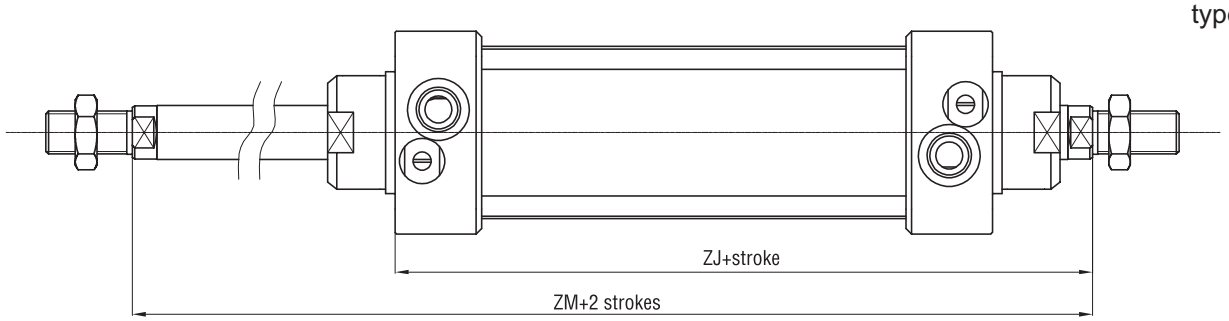

type: **...F**

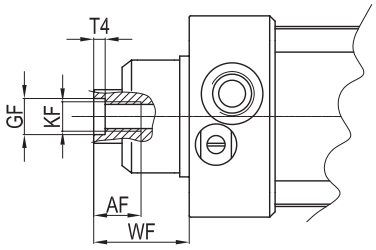

Ø mm	AF	KF	T4	WF	GF	ZJ	ZM
32	12	M6	2,6	26	8	120	146
40	12	M8	3,3	30	10	135	165
50	16	M10	4,7	37	12	143	180
63	16	M10	4,7	37	12	158	195
80	20	M12	6,1	46	14	174	220
100	20	M12	6,1	51	14	189	240
125	32	M16	8	65	18	225	290
160	36	M20	10	80	22	260	340
200	36	M20	10	95	22	275	370

type: **...TA1**

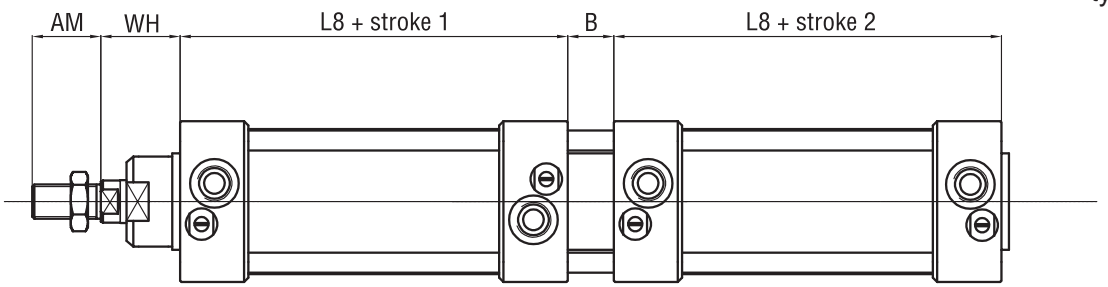

type: **...TA2**

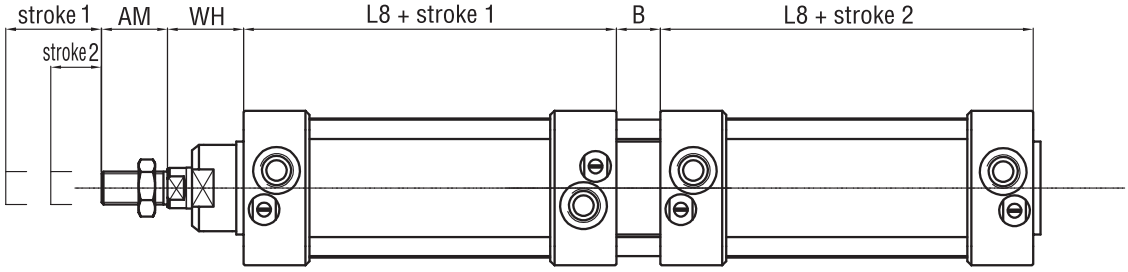

type: **...TA3**

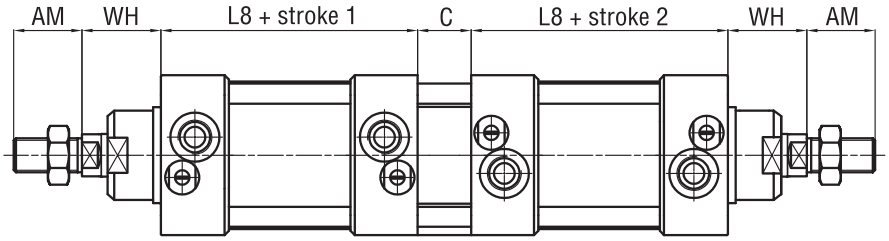

type: **...TA4**

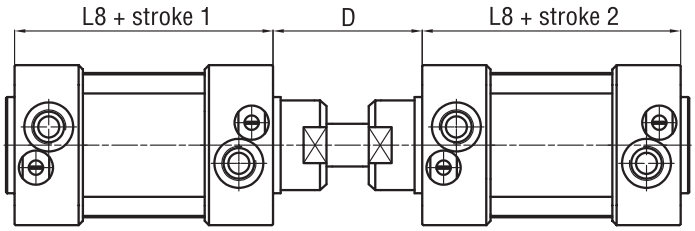

Ø mm	AM	B	C	D	L8	WH
32	22	40	12	48	94	26
40	24	44	12	54	105	30
50	32	52	16	69	106	37
63	32	50	16	69	121	37
80	40	64	20	86	128	46
100	40	76	20	91	138	51
125	54	80	35	120	160	65
160	72	100	50	152	180	80
200	72	130	50	167	180	95

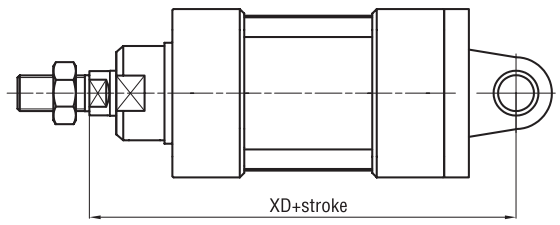

Rear clevis/eye

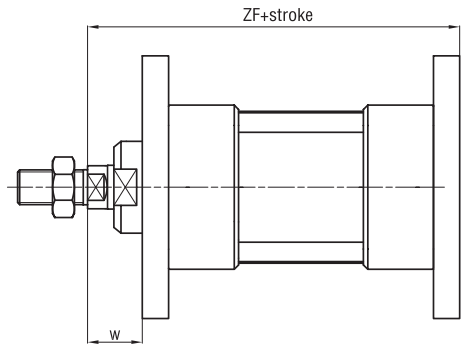

Flange

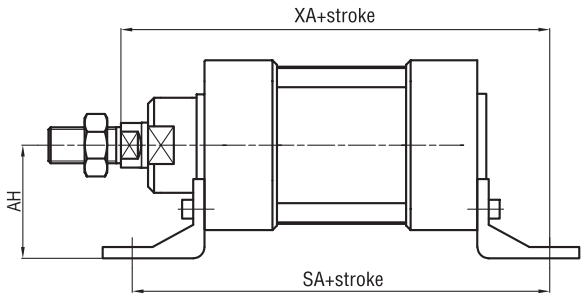

Feet

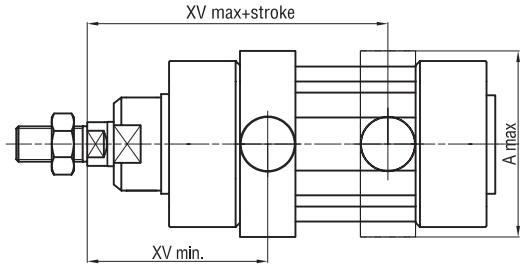

Centre trunnion

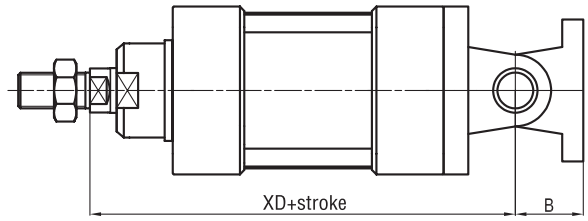

Rear standard hinge

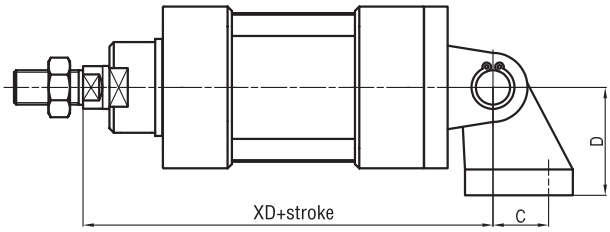

Rear 90° hinge

For dimensions and codes of the accessories: see page 5.40.1

Ø mm	A max	AH	B	C	D	SA	W	XA	XD	XV min	XV max	ZF
32	70	32	22	21	32	142	16	144	142	60	86	130
40	78	36	25	24	36	161	20	163	160	69	96	145
50	91	45	27	33	45	170	25	175	170	78	102	155
63	94	50	32	37	50	185	25	190	190	82	113	170
80	130	63	36	47	63	210	30	215	210	97	123	190
100	145	71	41	55	71	220	35	230	230	107	133	205
125	170	90	50	70	90	250	45	270	275	126,5	163,5	245
160	190	115	55	/	/	270	55	305	315	150	190	285
200	240	135	60	/	/	275	70	322,5	335	165	205	300

Mounting Accessories for Stainless Steel Cylinders

Clevis ISO 8140

Standard executions		
Version	Symbol	Type
Female clevis		FFXISO

Clevis conforming to ISO 8140 standards.
They are complete with clips in the standard version (the models M27X2 and M36X2 are normally provided with a pin and 2 seegers).
The clevis is mounted on the cylinder rod and allows a swinging movement.

Options	Sigla
Special versions on request	/ S

Technical data		
Materials	Body and clip:	Stainless steel AISI 316
	Seeger:	Stainless steel AISI 316

type: **FFXISO**

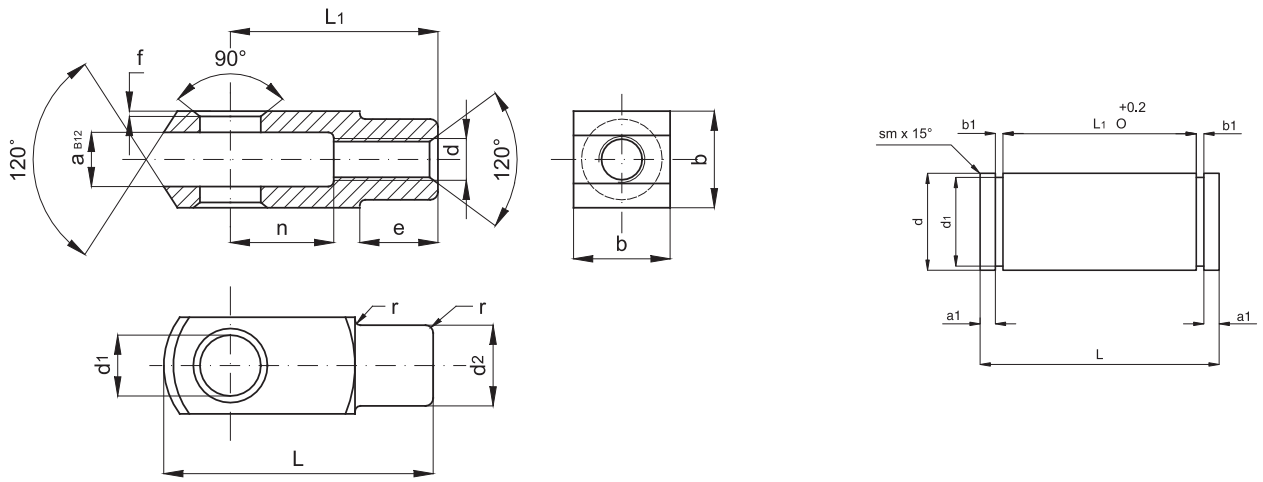

For the accessories of bore 125-160-200 mm, apply for availability because they have to be produced on request only.

Code	Item	For cylinder ø mm	d	a	a_1	b_1	b	d_1	d_3	L_2	d_2	e	f	L	L_1	n	r	Weight (g)
041052	4FFXISO	8-10	M4x0,7	4	1	1,1	8	4	-	11	8	6	0,5	21	16	8	0,5	7
041053	6FFXISO	12-16	M6x1	6	1	1,1	12	6	-	16	10	9	0,5	31	24	12	0,5	19
041054	8FFXISO	20	M8x1,25	8	1	1,1	16	8	-	22	14	12	0,5	42	32	16	0,5	47
041055	10FFXISO	25-32	M10x1,25	10	1,5	1,1	20	10	9,6	25	18	15	0,5	52	40	20	0,5	89
041056	12FFXISO	40	M12x1,25	12	2	1,1	24	12	11,5	30	20	18	0,5	62	48	24	0,5	153
041057	16FFXISO	50-63	M16x1,5	16	2,4	1,1	32	16	15,2	39	26	24	1	83	64	32	1	320
041058	20FFXISO	80-100	M20x1,5	20	2,9	1,3	40	20	19	48	34	30	1	105	80	40	1	680
041112	27FFXISO	125	M27x2	30	-	-	55	30	-	-	48	38	1	148	110	54	1	-
041113	36FFXISO	160-220	M36x2	35	-	-	70	35	-	-	60	40	1	188	144	72	1	-

Mounting Accessories for Stainless Steel Cylinders

Bearings - Bearing heads DIN 648-K and ISO 8139

Standard executions		
Version	Symbol	Type
With female thread		RFX..SE

Self-lubricating bearing heads servicing-free and conforming to DIN 648-K and ISO 8139 standards.
The bearing head is mounted on the cylinder rod.

Technical data		
Temperature range	-30 °C ÷ +150 °C	
Materials	Body:	Stainless steel AISI 304
	Sphere:	Stainless steel AISI 304
	External ring:	

type: **RFX..SE**

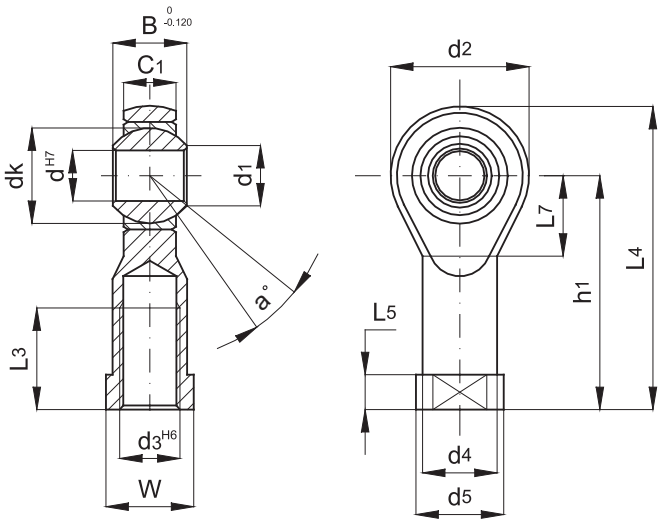

Code	Item	For cylin. ISO ø mm	d	d_3	B	C_1	d_1	d_2	d_4	d_5	dk	h_1	L_3	L_4	L_5	L_7	W	Static load (daN)	a°	Weig. (g)
041576	RFX4SE	8-10	5	M4	8	6	7,7	18	9	11	11,112	27	10	36	4	10	9	600	13	
041570	RFX6SE	12-16	6	M6	9	6,75	8,9	20	10	13	12,700	30	12	40	5	11	11	700	13	
041577	RFX8SE	20	8	M8	12	9	10,4	24	12,50	16	15,875	36	16	48	5	13	14	1200	14	
040009	RFX10SE	25-32	10	M10x1,25	14	10,50	12,9	28	15	19	19,050	43	20	57	6,5	15	17	1400	13	
041578	RFX12SE	40	12	M12x1,25	16	12	15,4	32	17,50	22	22,225	50	22	66	6,5	17	19	1900	13	
040011	RFX16SE	50-63	16	M16x1,5	21	15	19,3	42	22	27	28,575	64	28	85	8	23	22	4800	15	
041579	RFX20SE	80-100	20	M20x1,5	25	18	24,3	50	27,50	34	34,925	77	33	102	10	27	30	5200	14	
041580	RFX30SE	125	30	M27x2	37	25	34,8	70	40	50	50,800	110	51	145	15	36	41	10800	17	
041581	RFX35SE	160-200	35	M36x2	43	28	37,7	80	46	58	57,150	125	56	165	17	41	50	12400	19	

Standard executions		
Version	Symbol	Type
Rear clevis with pin		CFX
Foot		PX
Flange		FX

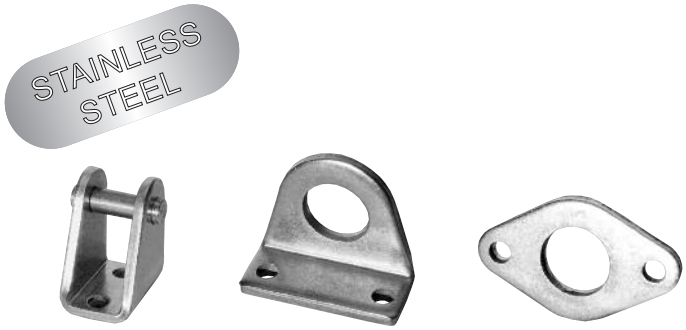

Technical data	
Material	Stainless steel AISI 304

type: **CFX**

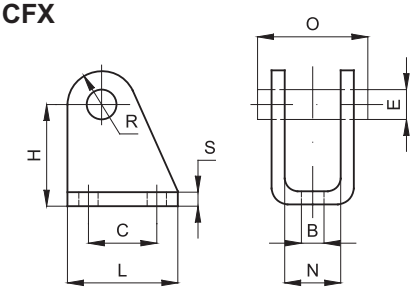

Rear clevis

Code	Item	For cyl. ø mm	B	E	C	H	L	N	O	R	S	Weight (g)
040046	CFX12-16	16	5,5	6	15	27	25	12,1	24	7	3	36
040047	CFX20-25	20-25	6,5	8	20	30	32	16,1	31	10	4	78

Complete with a pin and 2 seegers in the standard version.

type: **PX**

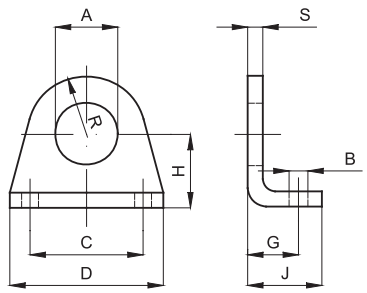

Foot

Code	Item	For cyl. ø mm	A	B	C	D	G	H	J	R	S	Weight (g)
040026	PX12-16	16	16,1	5,5	32	42	14	20	20	13	4	40
040027	PX20-25	20-25	22,1	6,6	40	54	17	25	25	20	5	90

type: **FX**

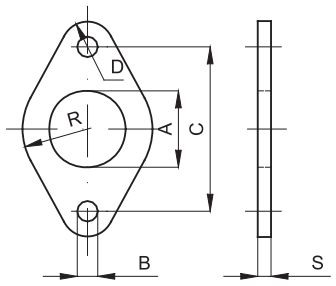

Flange

Code	Item	For cyl. ø mm	A	B	C	R	D	S	Weight (g)
040006	FX12-16	16	16	5,5	40	15	6	4	26
040007	FX20-25	20-25	22	6,6	50	20	8	5	50

Mounting Accessories for Stainless Steel Cylinders

Mounting screws

Standard executions		
Version	Standard	Type
Hexagon head cap screw for mounting VDMA 24 562	DIN912	VBVIX
Hexagon lowered head cap screw	DIN6912	VBTRX

How to order: VBVIX 032 / 040

VBVIX	032 / 040
Type	For cylinders bore 32 and 40 mm

Material: Stainless steel AISI 316

Screws			For cylinder mountings			
Code	**Item**	**Type**	**ISO 6431**	**VDMA 24 562**	**CNOMO**	**UNITOP**
040787	VBVIX 032/040	M6x18		•		
040788	VBVIX 050/063	M8x20		•		
040789	VBVIX 080/100	M10x20		•		
040790	VBVIX 125	M12x25		•		
040791	VBVIX 160/200	M16X30		•		
040792	VBTRX 032/040	M6x18		•		
040793	VBTRX 050/063	M8x20		•		
040794	VBTRX 080/100	M10x20		•		
040795	VBTRX 125	M12x25		•		
040796	VBTRX 160/200	M16x30		•		

Note for the use of the screws:
VBVIX Short hexagon head cap screw for mountings VDMA 24 562 (with spot facings)
VBTRX Short hexagon lowered head cap screw for mountings VDMA 24 562 (with spot facings)

Standard executions		
Version	Sym.	Type
Rear clevis		CFX..AQIS
Rear eye		CMX..AQIS
Rear 90° hinge CETOP RP 107P		ASVX..AQIS
Pin with rear clevis MP2 with seeger		SECX..AQIS
Narrow rear clevis		CFSX..AQIS
Narrow rear eye with bearing DIN 648K		CMSX..AQIS
Rear 90° hinge with bearing DIN 648K		ASSX..AQIS
Anti-rotating pin for narrow rear clevis		SECX..ARAQIS
Flange VDMA		FLVX..AQIS
Low foot		PBX..AQIS
Round adjustable centre trunnion (tie rod)		CTX..AQIS

STAINLESS STEEL

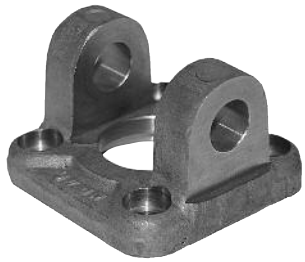

Technical data	
Material	Stainless steel AISI 316

Note: The mounting screws are to be ordered separately. (see page 5.35.1).
For the accessories of bore 125-160-200 mm, apply for availability because they have to be produced on request only.

type: **CFX**

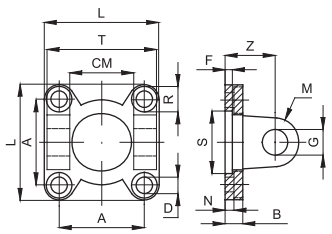

Rear clevis MP2

Code	Item	For cyl. ø mm	A	L	D	R	N	B	S	F	Z	G	M	CM	T	Weight (g)
040012	CFX32AQIS	32	32,5	45	6,6	11	5,5	10	30	5	22	10	10	26	45	
040830	CFX40AQIS	40	38	55	6,6	11	5,5	10	35	5	25	12	12	28	52	
040801	CFX50AQIS	50	46,5	65	9	15	6,5	10	40	5	27	12	12	32	60	
040014	CFX63AQIS	63	56,5	75	9	15	6,5	12	45	5	32	16	16	40	70	
040013	CFX80AQIS	80	72	95	11	18	10	14	45	-	36	16	16	50	90	
040838	CFX100AQIS	100	89	115	11	18	10	16	55	-	41	20	20	60	110	
040005	CFX125AQIS	125	110	140	13,5	20	10	20	60	-	50	25	25	70	130	
040797	CFX160AQIS	160	140	180	18	26	10	20	65	7	55	30	25	90	170	
040798	CFX200AQIS	200	175	220	18	26	11	20	75	7	60	30	25	90	170	

The pin is to be ordered separately: for the pin see page 5.40.2 (SECX..AQIS)

type: **CMX**

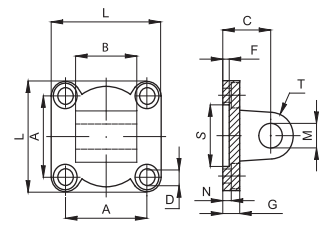

Rear eye MP4

Code	Item	For cyl. ø mm	A	L	D	R	N	G	S	F	C	M	T	B		Weight (g)
040805	CMX32AQIS	32	32,5	45	6,6	11	5,5	10	30	5	22	10	10	26	-0,2 -0,6	
040806	CMX40AQIS	40	38	55	6,6	11	5,5	10	35	5	25	12	12	28		
040802	CMX50AQIS	50	46,5	65	9	15	6,5	10	40	5	27	12	12	32		
040808	CMX63AQIS	63	56,5	75	9	15	6,5	12	45	5	32	16	16	40		
040016	CMX80AQIS	80	72	95	11	18	10	14	45	5	36	16	16	50		
040799	CMX100AQIS	100	89	115	11	18	10	16	55	5	41	20	20	60		
040008	CMX125AQIS	125	110	140	13,5	20	10	20	60	7	50	25	25	70	-0,5 -1,2	
040800	CMX160AQIS	160	140	180	18	26	10	20	65	7	55	30	25	90		
040804	CMX200AQIS	200	175	220	18	26	11	20	75	7	60	30	25	90		

type: **ASVX**

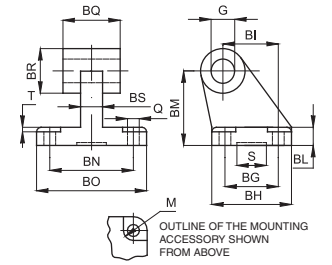

Rear 90° hinge CETOP RP 107P

Code	Item	For cyl. ø mm	Q	M	BG	BH	BI	BL	BM	BN	BO	BS	BR	BQ	G	T	S	Weight (g)
040809	ASVX32AQIS	32	6,6	11	18	31	21	8	32	38	51	10	20	26	10	1,6	20	
040810	ASVX40AQIS	40	6,6	11	22	35	24	10	36	41	54	10	22	28	12	1,6	20	
040812	ASVX50AQS	50	9	15	30	45	33	12	45	50	65	14	26	32	12	1,6	20	
040813	ASVX63AQIS	63	9	15	35	50	37	12	50	52	67	14	30	40	16	1,6	20	
040814	ASVX80AQIS	80	11	18	40	60	47	14	63	66	86	18	30	50	16	2,5	20	
040815	ASVX100AQIS	100	11	18	50	70	55	15	71	76	96	20	36	60	20	2,5	20	
040816	ASVX125AQIS	125	14	20	60	90	70	20	90	94	124	30	45	70	25	3,2	-	

type: **SECX**

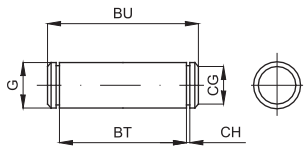

Pin for rear clevis MP2

Code	Item	For cyl. ø mm	G	BT	CG	CH	BU	Weight (g)
040829	SECX32AQIS	32	10	46	9,6	1,1	53	
040831	SECX40AQIS	40	12	53	11,5	1,1	60	
040811	SECX50AQIS	50	12	61	11,5	1,1	68	
040832	SECX63AQIS	63	16	71	15,2	1,1	78	
040015	SECX80AQIS	80	16	91	15,2	1,1	98	
040839	SECX100AQIS	100	20	111	19	1,3	118	
040818	SECX125AQIS	125	25	132	23,9	1,3	139	
040819	SECX160AQIS	160	30	171,5	28,6	1,6	178	
040820	SECX200AQIS	200	30	171,5	28,6	1,6	178	

It is supplied with 2 seegers included.

type: **CFSX**

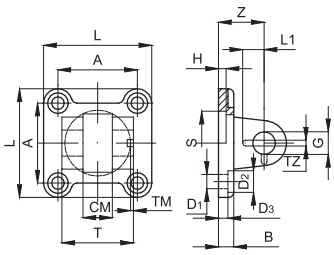

Narrow rear clevis for rear male trunnion with bearing DIN 648 K

Code	Item	For cyl. ø mm	L	T	CM	A	Z	H	B	DS	S	G	D_1	D_2	TA	TZ	LI	Weight (g)
040821	CFSX32AQIS	32	45	34	14	32,5	22	5	10	5,5	30	10	6,6	11	3	3,3	11,5	
040822	CFSX40AQIS	40	55	40	16	38	25	5	10	5,5	35	12	6,6	11	4	4,3	12	
040823	CFSX50AQIS	50	65	45	21	46,5	27	5	10	6,5	40	16	9	15	4	4,3	14	
040824	CFSX63AQIS	63	75	51	21	56,5	32	5	12	6,5	45	16	9	15	4	4,3	14	
040825	CFSX80AQIS	80	95	65	25	72	36	5	16	10	45	20	11	18	4	4,3	16	
040826	CFSX100AQIS	100	115	75	25	89	41	5	16	10	55	20	11	18	4	6,3	16	
040833	CFSX125AQIS	125	140	97	37	110	50	7	20	10	60	30	13,5	20	6	6,3	24	

Perno da ordinare separatamente: per perno vedi pag. 5.40.3 (SECX..ARAQIS)

type: **CMSX**

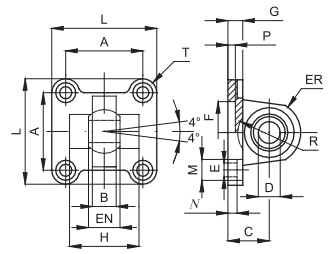

Narrow rear eye for rear male trunnion with bearing DIN 648 K

Code	Item	For cyl. ø mm	A	B	C	D	EN	ER	F	G	E	L	M	N	P	H	R	Weight (g)
040834	CMSX32AQIS	32	32,5	10,5	22	10	14	15	30	10	6,6	45	10,5	5,5	5	-	-	
040835	CMSX40AQIS	40	38	12	25	12	16	18	35	10	6,6	55	11	5,5	5	-	-	
040836	CMSX50AQIS	50	46,5	15	27	16	21	20	40	10	9	65	15	6,5	5	51	19	
040010	CMSX63AQIS	63	56,5	15	32	16	21	23	45	12	9	75	15	6,5	5	-	-	
040837	CMSX80AQIS	80	72	18	36	20	25	27	45	14	11	95	18	10	5	-	-	
040848	CMSX100AQIS	100	89	18	41	20	25	30	55	16	11	115	18	10	5	-	-	
040849	CMSX125AQIS	125	110	26	50	30	37	40	60	20	13,5	140	20	10	7	-	-	

type: **ASSX**

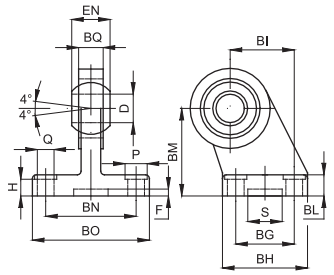

Rear 90° hinge with bearing DIN 648 K

Code	Item	For cyl. ø mm	Q	M	BG	BH	BI	BL	BM	BN	BO	EN	ER	BQ	D	H	S	F	Weight (g)
040850	ASSX32AQIS	32	6,6	11	18	31	21	10	32	38	51	14	15	10,5	10	8,5	20	3	
040851	ASSX40AQIS	40	6,6	11	22	35	24	10	36	41	54	16	18	12	12	8,5	20	3	
040852	ASSX50AQS	50	9	15	30	45	33	12	45	50	65	21	20	15	16	10,5	20	3	
040853	ASSX63AQIS	63	9	15	35	50	37	12	50	52	67	21	23	15	16	10,5	20	3	
040854	ASSX80AQIS	80	11	18	40	60	47	14	63	66	86	25	27	18	20	11,5	20	3	
040855	ASSX100AQIS	100	11	18	50	70	55	15	71	76	96	25	30	18	20	12,5	20	3	
040856	ASSX125AQIS	125	13,5	20	60	90	70	20	90	94	124	37	40	25	30	17	20	3	

type: **SECX - AR**

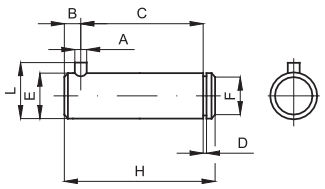

Anti-rotating pin for narrow rear clevis

Code	Item	For cyl. ø mm	A	C	D	E	F	G	H	L	B		Weight (g)
040857	SECX32ARAQIS	32	3	32,5	1,1	10	9,6	4	41	14	4,5	0 -1	
040858	SECX40ARAQIS	40	4	38	1,1	12	11,5	4	48	16	6		
040859	SECX50ARAQIS	50	4	43	1,1	16	15,2	5	54	20	6		
040860	SECX63ARAQIS	63	4	49	101	16	15,2	5	60	20	6		
040861	SECX80ARAQIS	80	4	63	1,3	20	19	6	75	24	6		
040862	SECX100ARAQIS	100	4	73	1,3	20	19	6	85	24	6		
040863	SECX125ARAQIS	125	6	94	1,6	30	28,6	7	110	36	9	0 -2	

It is supplied with 1 seeger included.

type: **FLVX**

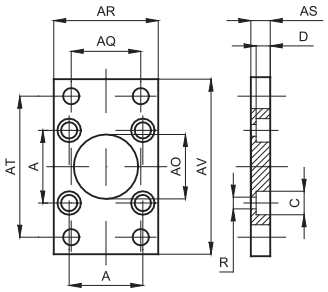

Flange VDMA MF1 / MF2

Code	Item	For cyl. ø mm	A	AP	AO	R	AS	AR	AQ	AT	AV	C	D	Weight (g)
040864	FLVX32AQIS	32	32,5	7	30	6,5	10	45	32	64	80	10,5	5	
040865	FLVX40AQIS	40	38	9	35	6,5	10	52	36	72	90	11	5	
040840	FLVX50AQIS	50	46,5	9	40	9	12	65	45	90	110	15	5,5	
040866	FLVX63AQIS	63	56,5	9	45	9	12	75	50	100	120	15	5,5	
040867	FLVX80AQIS	80	72	12	45	11	16	95	63	126	150	18	8	
040868	FLVX100AQIS	100	89	14	55	11	16	115	75	150	170	18	8	
040869	FLVX125AQIS	125	110	16	60	13,5	20	140	90	180	205	20	9,5	
040870	FLVX160AQIS	160	140	18	65	18	20	180	115	230	260	26	10,5	
040871	FLVX200AQIS	200	175	22	75	18	25	220	135	270	300	26	12,5	

Lowered head screws type VBTRX (see page 5.35.1) must be used with this mounting accessory.

type: **PBX**

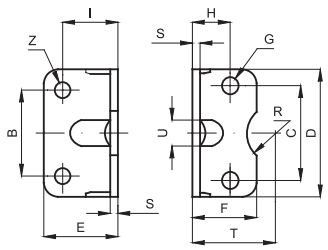

Low foot MS1

Code	Item	For cyl. ø mm	C	B	D	E	F	G	H	I	S	T	R	U	Z	Weight (g)
040872	PBX32AQIS	32	32,5	32	45	35	30	7	15,75	24	4	32	15	11	7	
040873	PBX40AQIS	40	38	36	52	36	30	7	17	28	4	36	17,5	15	9	
040874	PBX50AQIS	50	46,5	45	65	47	36	9	21,75	32	5	45	20	16	9	
040875	PBX63AQIS	63	56,5	50	75	45	35	9	21,75	32	5	50	22,5	18	9	
040876	PBX80AQIS	80	72	63	95	55	47	11	27	41	6	63	22,5	17	12	
040877	PBX100AQIS	100	89	75	115	57	53	11	26,5	41	6	71	27,5	24	14	
040878	PBX125AQIS	125	110	90	140	70	70	14	35	45	8	90	30	-	16	
040879	PBX160AQIS	160	140	115	180	75	100	18	45	60	9	115	32,5	-	18	
040880	PBX200AQIS	200	175	135	220	100	100	18	47,5	70	12	135	37,5	-	22	

It is supplied singly.

type: **CTX**

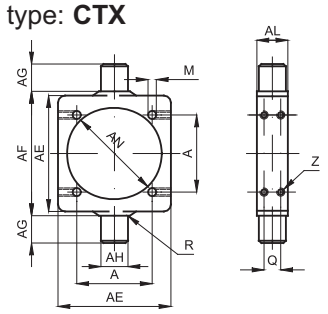

Round adjustable centre trunnion (tie rod) MT4

Code	Item	For cyl. ø mm	A	AE	AL	AH	AG	AF	AN	R	M	Q	Z	Weight (g)
040881	CTX32AQIS	32	32,5	46	15	12	12	50	37	1	6,25	7	M5	
040882	CTX40AQIS	40	38	59	20	16	16	63	46	1,5	6,25	8	M5	
040883	CTX50AQIS	50	46,5	69	20	16	16	75	56	1,6	8,25	8	M6	
040884	CTX63AQIS	63	56,5	84	25	20	20	90	69	1,6	8,25	12	M6	
040885	CTX80AQIS	80	72	102	25	20	20	110	87	1,6	10,25	12	M8	
040550	CTX100AQIS	100	89	125	30	25	25	132	107	2	10,25	15	M8	
040886	CTX125AQIS	125	110	155	32	25	25	160	133	2	12,25	15	M10	
040887	CTX160AQIS	160	140	190	40	32	32	200	170	2,5	16,25	18	M12	
040888	CTX200AQIS	200	175	240	40	32	32	250	211	2,5	16,25	18	M12	

Notes

Stainless Steel ancillary valves

Miniature ball valves from brass hexagonal bar

Executions			
Version	Symbol	Code	Item
1/4” female - female		030651	2MVSXFF
3/8” female - female		030652	3MVSXFF
1/2” female - female		030653	4MVSXFF
1/4” male-female		030654	2MVSXMF
3/8” male-female		030655	3MVSXMF
1/2” male-female		030656	4MVSXMF

Series of miniature ball valves from stainless steel hexagonal bar and manually operated.
In line mounting they work to close or open the flow in both directions.
For use in the alimentary and chemical field.

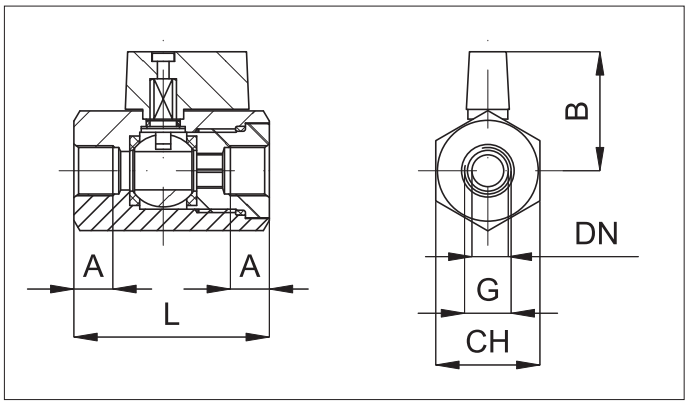

G	A	B	L	CH	DN	Weight gr FF	Weight gr MF
1/4”	10	30	50	27	10	200	170
3/8”	10	30	50	27	10	190	165
1/2”	10	30	50	27	10	175	160

Technical data			
Fluid	Compressed filtered air with or without lubrication. Lubrication, if be used, must be continous.		
Pressure range	0 ÷ 25 bar		
Temperature range	-20 °C ÷ + 150°C		
Orifice	See the dimension DN in the table		
Mounting	In-line		
Materials	Body:	Stainless steel AISI 316	
	Lever:	Nylon 66, reinforced glass	Ball: Stainless steel AISI 316
	Guarnizioni:	PTFE - FKM	

Stainless Steel ancillary valves

Ball valves “full bore”

Executions			
Version	Symbol	Code	Item
1/4”		030681	VSLX014FF
3/8”		030682	VSLX038FF
1/2”		030683	VSLX012FF
3/4”		030684	VSLX034FF
1”		030685	VSLX100FF
1 1/4”		030686	VSLX114FF
1 1/2”		030687	VSLX112FF
2”		030688	VSLX200FF

Series of stainless steel ball valves full bore with long lever and manually operated.
In line mounting they work to close or open the air flow in both directions.
For use in the alimentary and chemical fields.

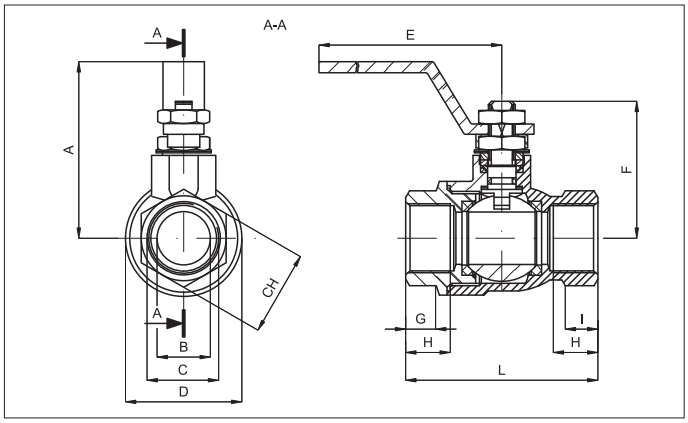

C	A	B	D	E	F	G	H	I	L	CH	Weight (g)
1/4”	52	8	29	110	37	8,5	11,4	8	50	21,5	220
3/8”	52	10	29	110	37	8,5	11,4	8	50	21,5	205
1/2”	55	15	34	110	42	10	15	9,5	60	26,5	275
3/4”	66	20	42,5	140	52	11,5	16,3	11,5	70	31,5	465
1”	70	25	50,5	140	56	14	19,1	13,5	85	40,5	710
1 1/4”	85	32	63	180	68	15,5	21,4	16	95	49,5	1180
1 1/2”	91	40	75,5	180	74	18,5	21,4	16	105	54,5	1740
2”	105	50	91	230	87	22,5	25,7	23,5	125	69,5	2930

Technical data							
Fluid	Compressed air, water, steam, inert gases and fluids						
Pressure range	1/4” - 3/8”- 1/2”= 100 bar	3/4”-1”= 64 bar	1 1/4”-1 1/2”-2”= 40 bar				
Temperature ange	-20 °C ÷ + 150°C						
Orifice	1/4”-3/8”= 10 mm	1/2”= 15 mm	3/4”= 20 mm	1”= 25 mm	1 1/4”= 32 mm	1 1/2= 40 mm	2”= 50 mm
Flow	1/4” - 3/8”= 3.000 l/min	1/2”= 11.500 l/min	3/4”= 21.000 l/min	1”= 33.000 l/min			
	1 1/4”= 50.000 l/min	1 1/2”= 84.000 l/min	2”= 97.000 l/min.				
Mounting	In-line						
Materials	Body:	Stainless steel AISI 316					
	Lever:	Stainless steel AISI 316	Ball: Stainless steel AISI 316				
	Seals:	PTFE - FKM					

Stainless Steel ancillary valves

Uni-directional valves

Executions			
Version	Symbol	Code	Item
1/8”	A B	030110	1FFX
1/4”		030111	2FFX
3/8”		030112	3FFX
1/2”		030113	4FFX
3/4”		030114	5FFX
1”		030115	6FFX
1 1/4”		030129	14FFX
1 1/2”		030130	12FFX
2”		030131	20FFX

Note: available on request with NPTF thread.

Series of uni-directional ball valves from hexagonal bar, female threaded.
In line mounting they allow the compressed air to flow in one direction only; therefore, they are useful in those applications where no return of the compressed air to the supply is admitted.

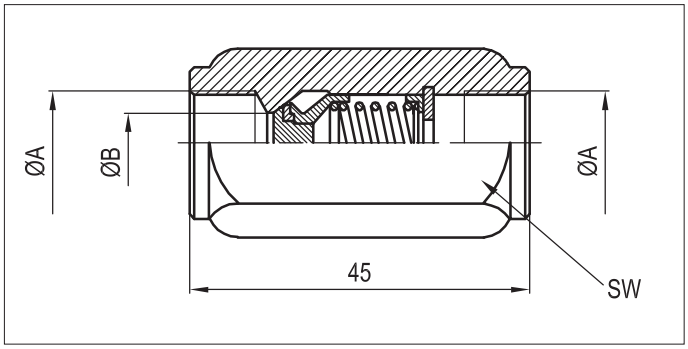

A	L	SW	Ø B	Orifice mm²	PMax bar	Weight gr.
1/8”	42	14	5	18	350	50
1/4”	50	19	7	22	350	90
3/8”	60	24	10	42	350	160
1/2”	65	27	11	75	350	280
3/4”	75	34	17	126	300	350
1”	93	41	21	230	250	580
1” 1/4	110	50	29	340	250	360
1” 1/2	112	55	34	509	250	1020
2”	120	75	48	1640	200	2200

Technical data			
Fluid	Compressed filtered air with or without lubrication		
Pressure range	from 0,5 bar to see table		
Temperature range	-20 °C ÷ + 150°C		
Orifice	see table		
Flow			
Mounting	In-line		
Materiali	Body:	Stainless steel AISI 316	
	Lever:	Stainless steel AISI 316	Ball: Stainless steel AISI 316
	Seals:	FKM	

5

Stainless Steel ancillary valves

Quick exhaust valves

Execution			
Version	Symbol	Code	Item
11/8”	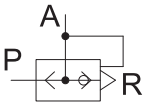	030810	1VSRX
1/4”		030809	2VSRX
3/8”		030811	3VSRX
1/2”		030812	4VSRX
3/4”		030813	5VSRX
1”		030814	6VSRX

Series of stailess steel quick exhaust valves used to increase the speed of a cylinder.
The valve must be mounted directly on the port of the cylinder to achieve the maximum possible speed.
When the supply is in P the diaphragm closes the exhaust R and so the air flows through A into the chamber of the cylinder. When the supply in P fails the diaphragm closes P and this is due to the exhaust air from A to R. The noise of the exhaust can be reduced by a silencer.
For stainless steel silencers see from page 5.190.1

Options		Suffix
Seals FKM	max 150 °C	V
Threaded NPTF		NPT

How to order : 2VSRVXNPT

2VSRX	NPT
Version	Option

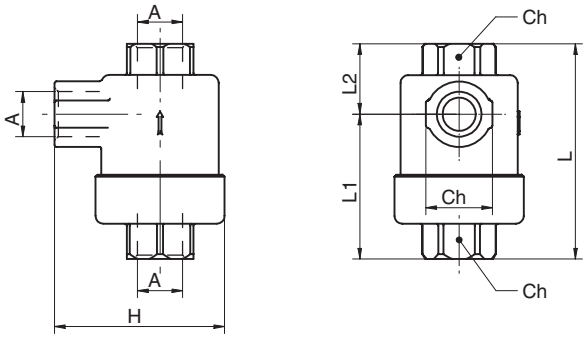

Version	L	L_1	L_2	H	CH
1/8”	37,5	21	16,5	32	22
1/4”	37,5	21	16,5	32	22
3/8”	44,5	25,5	19	37	26
1/2”	54	23	31	45	32
3/4”	79	35	44	65	46
1”	79	35	44	65	46

Technical data						
Fluid	Compressed filtered air with or without lubrication					
Pressure range	2 ÷ 10 bar					
Temperature range	1/8” and 1/4” = -10 °C ÷ + 140 °C, 3/8” - 1/2” - 3/4” and 1” = -20 °C ÷ + 80 °C					
Orifice (mm)	1/8” = 6	1/4” = 8	3/4” = 10	1/2” = 12	3/4” = 16	1” = 18
Materials	Body:	Stainless steel AISI 316L				
	Seals:	1/8” and 1/4” = FKM 3/8” - 1/2” - 3/4” - 1” = Polyurethane				

Stainless Steel push-in fittings

Series RX, in AISI 316 L

Version	Type
BSPT stud	RX11
BSP stud	RX12
Union	RX26
Bulkhead	RX27
Reducer	RX25
BSPT elbow	RX14
BSPT swivel elbow	RX15
BSP swivel elbow	RX16
Equal elbow	RX28
BSPT swivel tee	RX20
BSP swivel tee	RX21
Equal tee	RX29
Single hollow bolt	RX31
Single banjo	RX35

External tube ø (mm)	4	5	6	8	10	12
Code	04	05	06	08	10	12

Threads	M5	1/8”	1/4”	3/8”	1/2”
Code	M5	18	14	38	12

APPLICATION FIELDS:
Chemistry
Pharmaceutics
Medicine
Alimentary field
Electronics

STAINLESS STEEL

Series of stainless steel push-in fittings with reduced dimensions and new collet and release collar.
They are for connecting nylon and polyurethane tubes.
Available in various configurations (studs, elbows, T) and with threads Gas pre-tefloned taper (BSPT) and Gas parallel (BSP) with sealing o-ring.
The stud threaded versions are standard with external and internal hexagonal key (for mounting in narrow places).

* How to order: RX110618

RX11	06	18
Type	Tube ø code	Tube or thread code

* For standard items, codes and dimensions see tables from page. 5.150.2

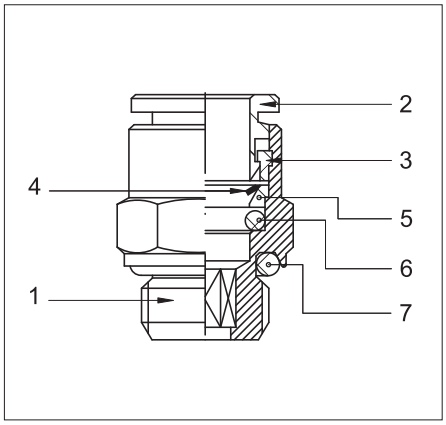

1 = Body
2 = Release collar
3 = Sealing ring
4 = Collet
5 = Protection seal
6 = O-ring
7 = O-ring

Technical data		
Fluid	Compressed air, gases, acids, fluids	
Pressure range	0,5 ÷ 12 bar	
Temperature range	-20 °C ÷ + 150°C	
Parallel threads	UNI - ISO 228 / 1 (BSP)	
Taper threads	UNI - ISO 7 / 1 (BSPT)	
Metric threads	ISO R / 262	
Connection tubes	Calibrated nylon, polyurethane and rilsan	
Tube tolerances	± 0,05 mm	
Materials	Body and release collar:	Stainless steel AISI 316 L
	Sealing ring and protection ring:	Stainless steel AISI 316 L
	Collet:	Stainless steel AISI 301
	Seals:	FKM

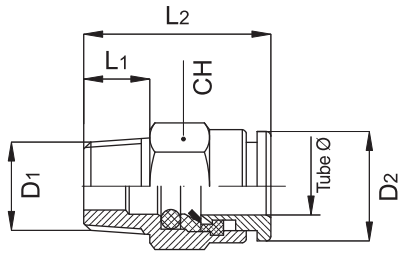

BSPT stud

Code	Item	Tube ø	D_1	D_2	L_1	L_2	CH
020901	RX 11 04 18	4	1/8”	9	7,5	15,5	10
020902	RX 11 04 14	4	1/4”	9	11	20	14
020903	RX 11 06 18	6	1/8”	12	7,5	20,5	12
020904	RX 11 06 14	6	1/4”	12	11	20	14
020905	RX 11 08 18	8	1/8”	14	7,5	24,5	14
020906	RX 11 08 14	8	1/4”	14	11	23	14
020907	RX 11 10 14	10	1/4”	16	11	30	16
020908	RX 11 10 38	10	3/8”	16	11,5	23,5	17
020909	RX 11 12 38	12	3/8”	18	11,5	27	18
020910	RX 11 12 12	12	1/2”	18	14	27	22

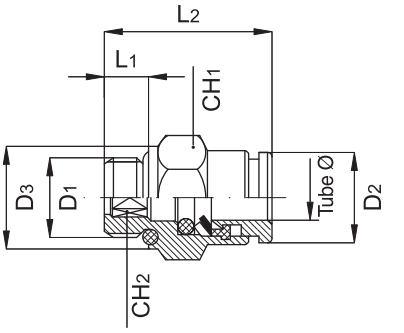

BSP stud

Code	Item	Tube ø	D_1	D_2	D_3	L_1	L_2	CH_1	CH_2
020915	RX 12 04 M5	4	M5	9	8	4	19	9	-
020916	RX 12 04 18	4	1/8”	9	13	5	16	13	3
020917	RX 12 06 18	6	1/8”	12	13	5	19	13	4
020918	RX 12 06 14	6	1/4”	12	16	6,5	18,5	16	4
020919	RX 12 08 18	8	1/8”	14	13	5	22,5	14	6
020920	RX 12 08 14	8	1/4”	14	16	6,5	21	16	6
020911	RX 12 10 14	10	1/4”	16	16	6.5	27.5	16	8
020912	RX 12 10 38	10	3/8”	16	20	7	25	17	8
020913	RX 12 12 38	12	3/8”	19	20	7	28.5	21	10
020914	RX 12 12 12	12	1/2”	19	25	8.5	26.5	22	10

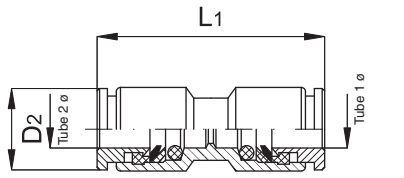

Union

Code	Item	Tube 1 ø	Tube 2 ø	D_2	L_1
020925	RX 26 04 04	4	4	9	27
020924	RX 26 06 04	6	4	12	31
020926	RX 26 06 06	6	6	12	32,5
020935	RX 26 08 06	8	6	14	34
020927	RX 26 08 08	8	8	14	33
020928	RX 26 10 10	10	10	16	37,5
020929	RX 26 12 12	12	12	18	39,5

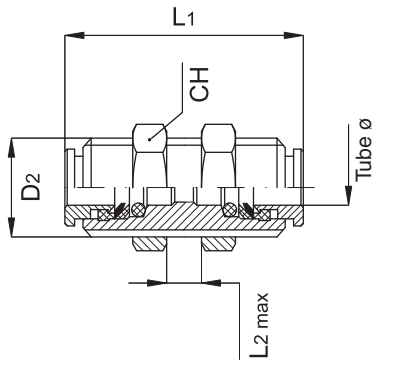

Bulkhead

Code	Item	Tube ø	D_2	L_1	L_2 max	CH
020930	RX 27 04 04	4	12x1	27	11	15
020931	RX 27 06 06	6	14x1	32,5	16	17
020932	RX 27 08 08	8	16x1	33	17	19
020933	RX 27 10 10	10	18x1	37,5	19	21
020934	RX 27 12 12	12	20x1	39,5	20	24

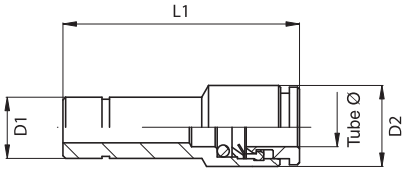

Reducer

Code	Item	Tube ø	D_1	D_2	L_1
020921	RX 25 04 06	4	6	9	31
020922	RX 25 06 08	6	8	12	33
020923	RX 25 08 10	8	10	14	34,5

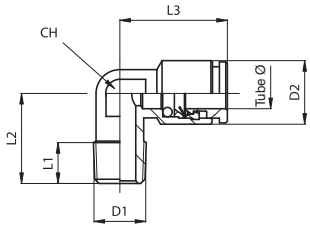

BSPT elbow

Code	Item	Tube ø	D_1	D_2	L_1	L_2	L_3
020956	RX 14 04 18	4	1/8”	9	7,5	16	17
020957	RX 14 06 18	6	1/8”	12	7,5	16	20
020958	RX 14 06 14	6	1/4”	12	11	20	20
020959	RX 14 08 18	8	1/8”	14	7,5	17	21
020949	RX 14 08 14	8	1/4”	14	11	20	21
020946	RX 14 10 14	10	1/4”	16	11	22.5	25.5

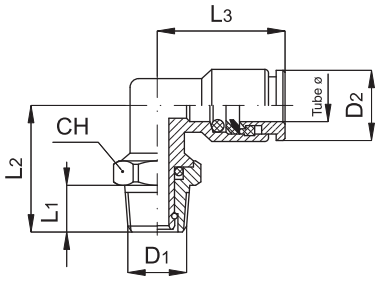

BSPT swivel elbow

Code	Item	Tube ø	D_1	D_2	L_3	L_1	L_2	CH
020936	RX 15 04 18	4	1/8”	9	17	7,5	17,5	10
020937	RX 15 06 18	6	1/8”	12	21,5	7,5	20	13
020938	RX 15 06 14	6	1/4”	12	21,5	11	24	14
020939	RX 15 08 18	8	1/8”	14	22	7,5	20	13
020940	RX 15 08 14	8	1/4”	14	22	11	24	14
020941	RX 15 10 14	10	1/4”	16	25,5	11	26,5	16
020942	RX 15 10 38	10	3/8”	16	25,5	11,5	27	17
020943	RX 15 12 38	12	3/8”	18	28	11,5	30,5	21
020944	RX 15 12 12	12	1/2”	18	28	14	33,5	22

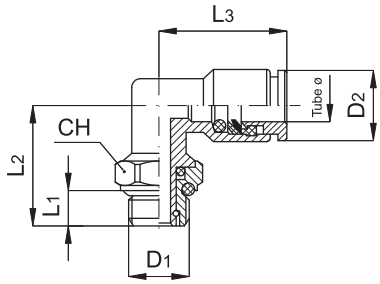

BSP swivel elbow

Code	Item	Tube ø	D_1	D_2	L_1	L_2	L_3	CH
020950	RX 16 04 M5	4	M5	9	4	14	17	9
020951	RX 16 04 18	4	1/8”	9	5	16	17	13
020952	RX 16 06 18	6	1/8”	12	5	18	21,5	13
020953	RX 16 06 14	6	1/4”	12	6,5	20	21,5	16
020954	RX 16 08 18	8	1/8”	14	5	18	22	13
020955	RX 16 08 14	8	1/4”	14	6,5	20	22	16
020947	RX 16 10 14	10	1/4”	16	6,5	22.5	25.5	16
020983	RX 16 10 38	10	3/8”	16	7	24	25.5	21
020984	RX 16 12 38	12	3/8”	19	7	26.5	28	21
020985	RX 16 12 12	12	1/2”	19	8,5	31	28	22

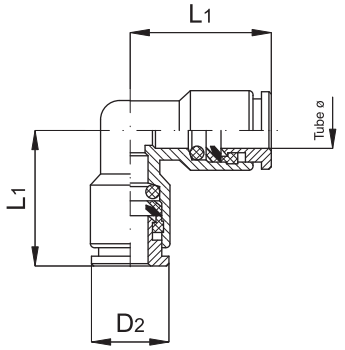

Equal elbow

Code	Item	Tube ø	D_2	L_1
020960	RX 28 04 04	4	9	17
020961	RX 28 06 06	6	12	20
020962	RX 28 08 08	8	14	21
020963	RX 28 10 10	10	16	25
020964	RX 28 12 12	12	18	27

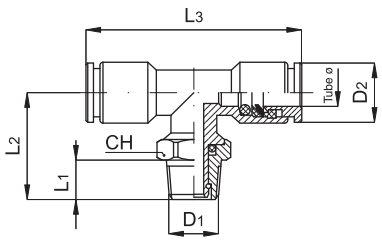

BSPT swivel elbow

Code	Item	Tube ø	D_1	D_2	L_1	L_2	L_3	CH
020966	RX 20 04 18	4	1/8”	9	7,5	21,5	34	10
020967	RX 20 06 18	6	1/8”	12	7,5	24,5	42	13
020968	RX 20 06 14	6	1/4”	12	11	28,5	42	14
020969	RX 20 08 18	8	1/8”	14	7,5	24,5	43	13
020970	RX 20 08 14	8	1/4”	14	11	28,5	43	14
020971	RX 20 10 14	10	1/4”	16	11	32	50	16
020972	RX 20 10 38	10	3/8”	16	11,5	32,5	50	17

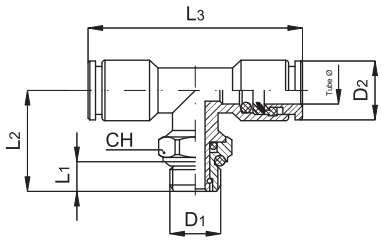

BSP swivel tee

Code	Item	Tube ø	D_1	D_2	L_1	L_2	L_3	CH
020974	RX 21 04 M5	4	M5	9	4	18	34	9
020975	RX 21 04 18	4	1/8”	9	5	20	34	13
020976	RX 21 06 18	6	1/8”	12	5	22,5	42	13
020977	RX 21 06 14	6	1/4”	12	6,5	24,5	42	16
020978	RX 21 08 18	8	1/8”	14	5	22,5	43	13
020979	RX 21 08 14	8	1/4”	14	6,5	24,5	43	16
020986	RX 21 10 14	10	1/4”	16	6,5	25,5	50	16
020987	RX 21 10 38	10	3/8”	16	7	27	50	21

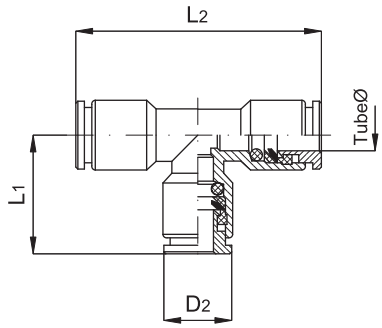

Equal tee

Code	Item	Tube ø	D_2	L_1	L_2
020995	RX 29 04 04	4	9	17	34
020996	RX 29 06 06	6	12	20	40
020997	RX 29 08 08	8	14	21	42
020998	RX 29 10 10	10	16	25	50
020999	RX 29 12 12	12	18	27	54

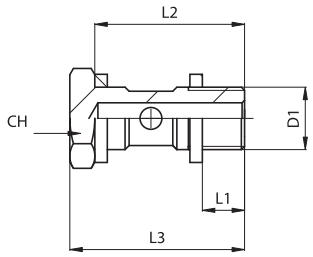

Single hollow bolt

Code	Item	D_1	L_1	L_2	L_3	CH
020980	RX 31 00 18	1/8”	5,5	23	27	14
020948	RX 31 00 14	1/4”	6,5	26,5	31,5	17
020988	RX 31 00 38	3/8”	7	30	36	21
020989	RX 31 00 12	1/2”	8,5	35,5	41,5	26

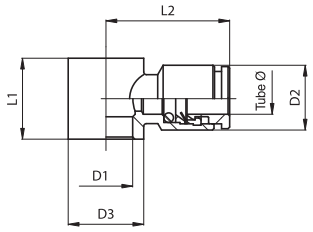

Single banjo

Code	Item	Tube ø	D_1	D_2	D_3	L_1	L_2
020982	RX 35 04 18	4	1/8”	9	14	15	19,5
020981	RX 35 06 18	6	1/8”	12	14	15	22
020973	RX 35 06 14	6	1/4”	12	18	17	23,5
020965	RX 35 08 18	8	1/8”	14	14	15	22,5
020945	RX 35 08 14	8	1/4”	14	18	17	24
020990	RX 35 10 14	10	1/4”	14	18	17	27
020991	RX 35 10 38	10	3/8”	16	22	20	29
020992	RX 35 12 38	12	1/2”	16	22	20	31
020993	RX 35 12 12	12	1/2”	19	26	24	33

Notes

Stainless Steel rapid fittings

Series CX, in AISI 316 L

Version	Type
BSPT stud	CX11
Union	CX14
BSPT elbow	CX16
Elbow union	CX18
BSTP central tee	CX20
BSTP lateral tee	CX21
Equal tee	CX19
Nut	CX27

Series of stainless steel rapid fittings in AISI 316L suitable for applications with very high temperatures and/or aggressive fluids not compatible with standard seals.

*How to order: CX110618

CX11	06	18
Type	Tube ø code	Tube or thread code

* For standard items, codes and dimensions see tables from page 5.155.2

External tube ø (mm)	4	5	6	8	10
Code	04	05	06	08	10

Threads	1/8”	1/4”	3/8”
Code	18	14	38

Technical data	
Fluid	All those compatible with stainless steel AISI 316 L
Max pressure	25 bar
Temperature range	-40 °C ÷ + 200°C
Taper threads	UNI - ISO 7 / 1 (BSPT)
Connection tubes	Suggested PTFE
Tube tolerances	Up to 10 mm: ± 0,05 mm - ø 12 mm and 15 mm: ± 0,1 mm
Materials	Body and nut: Stainless steel AISI 316 L

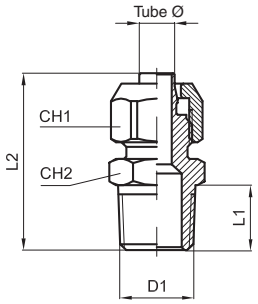

BSPT stud

Code	Item	Tube ø	D_1	L_1	L_2	CH_1	CH_2	Weight gr.
021560	CX 11 06 18	6-4	1/8”	7,5	26	34	10	12
021561	CX 11 06 14	6-4	1/4”	11	29,5	12	14	18
021562	CX 11 08 18	8-6	1/8”	7,5	26,5	14	13	16,5
021563	CX 11 08 14	8-6	1/4”	11	30	14	14	20,5
021564	CX 11 10 14	10-8	1/4”	11	32,5	16	14	24
021565	CX 11 10 38	10-8	3/8”	11,5	33	16	17	30

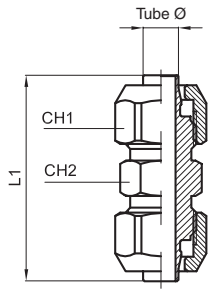

Union

Code	Item	Tube ø	L_1	CH_1	CH_2	Weight gr.
021566	CX 14 06 00	6-4	34	12	10	20
021567	CX 14 08 00	8-6	35	14	12	26
021568	CX 14 10 00	10-8	39	16	14	36

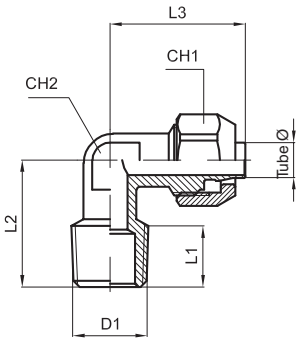

BSPT elbow

Code	Item	Tube ø	D_1	L_1	L_2	L_3	CH_1	CH_2	Weight gr.
021569	CX 16 06 18	6-4	1/8”	7,5	17	23	12	10	17
021570	CX 16 06 14	6-4	1/4”	11	21,5	23	12	10	20
021571	CX 16 08 18	8-6	1/8”	7,5	17	23	14	10	18
021572	CX 16 08 14	8-6	1/4”	11	21,5	23	14	10	21
021573	CX 16 10 14	10-8	1/4”	11	21,5	25,5	16	10	25

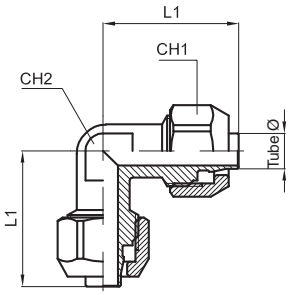

Elbow union

Code	Item	Tube ø	L_1	L_1	CH_1	CH_2	Weight gr.
021574	CX 18 06 00	6-4	22,5	22,5	12	10	25
021575	CX 18 08 00	8-6	23	23	14	10	27
021576	CX 18 10 00	10-8	25,5	25,5	16	10	33

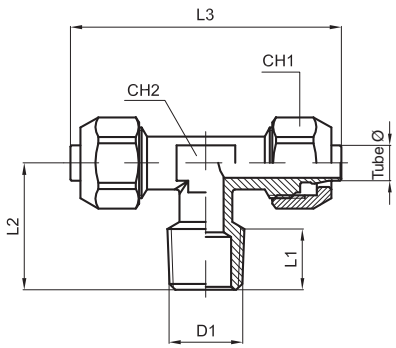

BSTP central tee

Code	Item	Tube ø	D_1	L_1	L_2	L_3	CH_1	CH_2	Weight gr.
021577	CX 20 06 18	6-4	1/8”	8	17	46	12	10	29
021578	CX 20 06 14	6-4	1/4”	11	21,5	46	12	10	32
021579	CX 20 08 18	8-6	1/8”	8	17	46	14	10	30
021580	CX 20 08 14	8-6	1/4”	11	21,5	46	14	10	34
021581	CX 20 10 14	10-8	1/4”	11	21,5	51	16	10	40

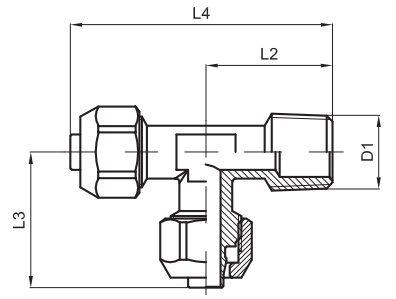

BSTP lateral tee

Code	Item	Tube ø	D_1	L_1	L_2	L_3	L_4	CH_1	CH_2	Weight gr.
021582	CX 21 06 18	6-4	1/8”	8	17	23	40	12	10	29
021583	CX 21 06 14	6-4	1/4”	11	21,5	23	44,5	12	10	32
021584	CX 21 08 18	8-6	1/8”	8	17	23	40	14	10	30
021585	CX 21 08 14	8-6	1/4”	11	21,5	23	44,5	14	10	34
021586	CX 21 10 14	10-8	1/4”	11	21,5	25,5	47	16	10	40

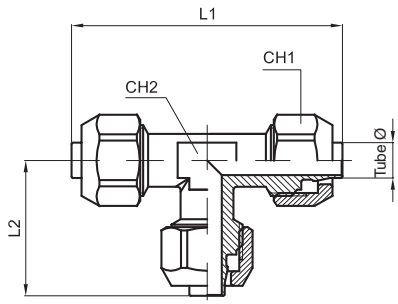

Equal tee

Code	Item	Tube ø	L_1	L_1	CH_1	CH_2	Weight gr.
021587	CX 19 06 00	6-4	45	22,5	12	10	36
021588	CX 19 08 00	8-6	46	23	14	10	39
021589	CX 19 10 00	10-8	51	25,5	16	10	49

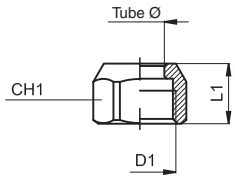

Nut

Code	Item	Tube ø	D_1	L_1	CH_1	Weight gr.
021590	CX 27 06 10	6-4	M10x1	10	12	4
021591	CX 27 08 12	8-6	M12x1	10	14	5
021592	CX 27 10 14	10-8	M14x1	11	16	7

Notes

Stainless Steel compression fittings

Series OX, in AISI 316

Version	Type
BSPT stud	OX11
Female BSPT stud	OX13
Union	OX14
Bulkhead	OX15
BSPT elbow	OX16
Equal elbow	OX17
BSPT - compression tee	OX19
Equal tee	OX18
Equal +	OX28
Nut	OX21
Ogive	OX22
Tube insert	OX23

Series of stainless steel AISI 316 TI compression fittings conforming to DIN 2353 standards for metal tubes.
The ogive crushing onto the tube, by screwing down the external nut, allows to get a safe connection and to work even at high pressures.
The ogive is single cone.
This series of fittings can also be used for connecting non-stiff tubes and this by applying a tube insert inside the tube.
Available with threads Gas taper (BSPT) and Gas parallel (BSP).

External tube ø (mm)	6	8	10	12	14	15	16	18
Code	06	08	10	12	14	15	16	18

Threads	1/8”	1/4”	3/8”	1/2”
Code	18	14	38	12

* How to order: 0X110814

OX11	08	14
Type	Tube ø code	Tube or thread code

* For standard items, codes and dimensions see tables from page 5.160.2

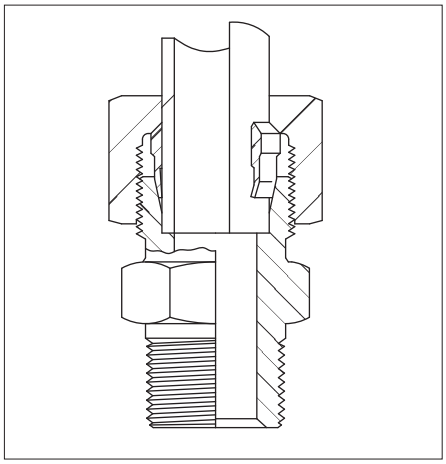

Technical data	
Fluid	Compressed air, aggressive fluids, oil at low pressure
Pressure	Tube from 6 to 15 mm: 250 bar - Tube 16 and 15 mm: 160 bar
Temperature	According to the tube used
Taper threads	UNI - ISO 7 / 1 (BSPT)
Connection tubes	Metal or rilsan, nylon, polyurethane, polyethylene (with insert tube)
Materials	Completely in stainless steel AISI 316 TI

Stainless Steel compression fittings

Series OX, in AISI 316

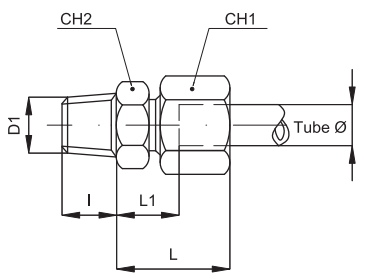

BSPT stud

Code	Item	Tube ø	D_1	I	L	L_1	CH_1	CH_2
027031	OX 11 06 18	6	1/8”	10	23	7	14	12
027053	OX 11 08 18	8	1/8”	10	23	8	17	14
027033	OX 11 08 14	8	1/4”	13	25	8	17	17
027034	OX 11 08 38	8	3/8”	13	23	9	17	19
027035	OX 11 08 12	8	1/2”	16	23	11	17	22
027036	OX 11 10 14	10	1/4”	13	26	9	19	17
027037	OX 11 10 38	10	3/8”	13	24	10	19	19
027038	OX 11 10 12	10	1/2”	16	24	11	19	22
027039	OX 11 12 14	12	1/4”	13	25	10	22	19
027040	OX 11 12 38	12	3/8”	13	27	10	22	19
027041	OX 11 12 12	12	1/2”	16	25	10	22	22
027042	OX 11 14 12	14	1/2”	16	29	11	27	24
027043	OX 11 15 12	15	1/2”	16	29	11	27	24
027044	OX 11 16 12	16	1/2”	16	31	11,5	32	27
027045	OX 11 18 12	18	1/2”	16	31	11,5	32	27

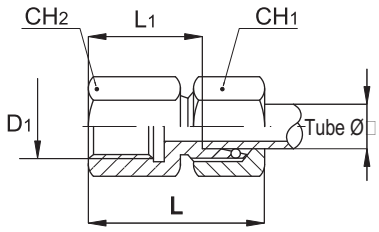

Female BSP stud

Code	Item	Tube ø	D_1	L	L_1	CH_1	CH_2
027081	OX 13 06 18	6	1/8”	34	19	14	14
027082	OX 13 08 14	8	1/4”	39	24	17	19
027083	OX 13 10 14	10	1/4”	40	25	19	19
027084	OX 13 12 38	12	3/8”	41	26	22	24
027085	OX 13 14 12	14	1/2”	46	31	27	27
027086	OX 13 15 12	15	1/2”	46	31	27	27
027087	OX 13 16 12	16	1/2”	47	30,5	32	27
027088	OX 13 18 12	18	1/2”	47	30,5	32	27

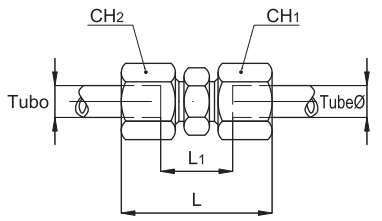

Union

Code	Item	Tube ø	L	L_1	CH_1	CH_2
027001	OX 14 06 06	6	39	10	14	12
027002	OX 14 08 08	8	40	11	17	14
027003	OX 14 10 10	10	42	13	19	17
027004	OX 14 12 12	12	43	14	22	19
027005	OX 14 14 14	14	46	16	27	24
027006	OX 14 15 15	15	46	16	27	24
027007	OX 14 16 16	16	48	16	32	27
027008	OX 14 18 18	18	48	16	32	27

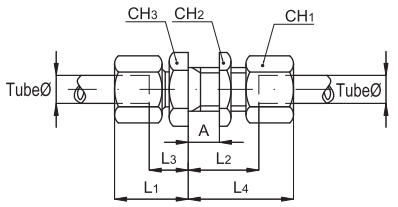

Bulkhead

Code	Item	Tube ø	L_1	L_2	L_3	L_4	CH_1	CH_2	CH_3
027137	OX 15 06 06	6	22	27	7	42	14	17	17
027138	OX 15 08 08	8	23	27	8	42	17	19	19
027139	OX 15 10 10	10	25	28	10,5	43	19	22	22
027140	OX 15 12 12	12	25	29	10	44	22	24	24
027141	OX 15 14 14	14	27	31	12	46	27	30	27
027142	OX 15 15 15	15	27	31	12	46	27	30	27
027143	OX 15 16 16	16	30	32,5	13,5	49	32	36	32
027144	OX 15 18 18	18	30	32,5	13,5	49	32	36	32

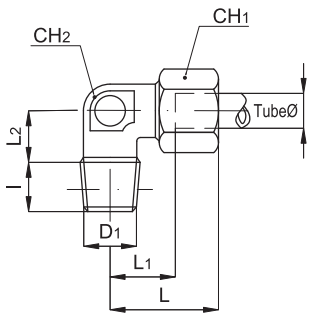

BSPT elbow

Code	Item	Tube ø	D_1	I	L	L_1	L_2	CH_1	CH_2
027091	OX 16 06 18	6	1/8”	8	27	12	15	14	12
027092	OX 16 06 14	6	1/4”	12	27	15,5	15	14	12
027093	OX 16 08 18	8	1/8”	12	29	15,5	18	17	12
027094	OX 16 08 14	8	1/4”	12	29	14	18	17	12
027095	OX 16 08 38	8	3/8”	12	29	17,5	18	17	17
027096	OX 16 10 14	10	1/4”	12	30	15	19	19	14
027097	OX 16 10 38	10	3/8”	12	30	17	19	19	17
027099	OX 16 12 14	12	1/4”	12	32	17	20	22	17
027100	OX 16 12 38	12	3/8”	12	32	17	20	22	17
027101	OX 16 12 12	12	1/2”	14	32	20	20	22	19
027102	OX 16 14 12	14	1/2”	14	36	21	24	27	19
027103	OX 16 15 12	15	1/2”	14	36	21	24	27	19
027104	OX 16 16 12	16	1/2”	14	40	23	26	32	24
027105	OX 16 18 12	18	1/2”	14	40	23	26	32	24

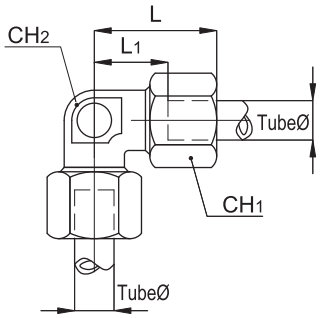

Equal elbow

Code	Item	Tube ø	L	L_1	CH_1	CH_2
027061	OX 17 06 06	6	27	12	14	12
027062	OX 17 08 08	8	29	14	17	12
027063	OX 17 10 10	10	30	15	19	14
027064	OX 17 12 12	12	32	17	22	17
027065	OX 17 14 14	14	36	21	27	19
027066	OX 17 15 15	15	36	21	27	19
027067	OX 17 16 16	16	40	23,5	32	24
027068	OX 17 18 18	18	40	23,5	32	24

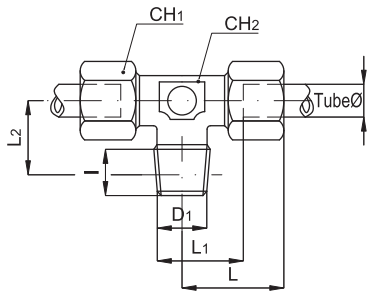

BSPT - compression tee

Code	Item	Tube ø	D_1	I	L	L_1	L_2	CH_1	CH_2
027151	OX 19 06 18	6	1/8”	8	27	12	15	14	12
027153	OX 19 08 14	8	1/4”	12	29	14	18	17	12
027156	OX 19 12 38	12	3/8”	12	32	17	20	22	17
027157	OX 19 14 12	14	1/2”	14	36	21	24	27	19
027158	OX 19 15 12	15	1/2”	14	36	21	24	27	19
027159	OX 19 16 12	16	1/2”	14	40	23,5	26,5	32	24
027160	OX 19 18 12	18	1/2”	14	40	23,5	26,5	32	24

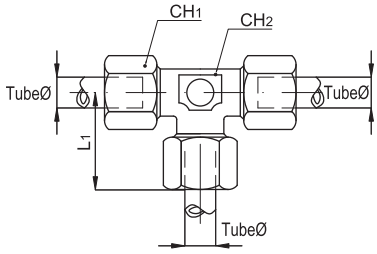

Equal tee

Code	Item	Tube ø	L	L_1	CH_1	CH_2
027121	OX 18 06 06	6	27	12	14	12
027122	OX 18 08 08	8	29	14	17	12
027123	OX 18 10 10	10	30	15	19	14
027124	OX 18 12 12	12	32	17	22	17
027125	OX 18 14 14	14	36	21	27	19
027126	OX 18 15 15	15	36	21	27	19
027127	OX 18 16 16	16	40	23,5	32	24
027128	OX 18 18 18	18	40	23,5	32	24

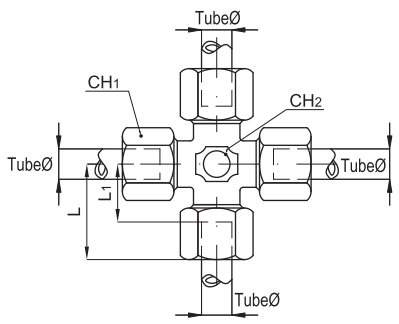

Equal +

Code	Item	Tube ø	L	L_1	CH_1	CH_2
027211	OX 28 06 06	6	27	12	14	12
027212	OX 28 08 08	8	29	14	17	12
027213	OX 28 10 10	10	30	15	19	14
027214	OX 28 12 12	12	32	17	22	17
027215	OX 28 14 14	14	36	21	27	19
027216	OX 28 15 15	15	36	21	27	19
027217	OX 28 16 16	16	40	23,5	32	24
027218	OX 28 18 18	18	40	23,5	32	24

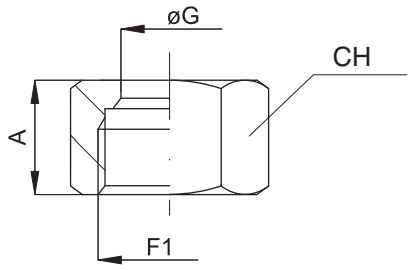

Nut

Code	Item	Tube ø	F_1	A	CH	ø G
027241	OX 21 06 06	6	12x1,5	14,5	14	6
027242	OX 21 08 08	8	14x1,5	14,5	17	8
027243	OX 21 10 10	10	16x1,5	15,5	19	10
027244	OX 21 12 12	12	18x1,5	15,5	22	12
027245	OX 21 14 14	14	22x1,5	17	27	15
027246	OX 21 15 15	15	22x1,5	17	27	15
027247	OX 21 16 16	16	26x1,5	18	32	18
027248	OX 21 18 18	18	26x1,5	18	32	18

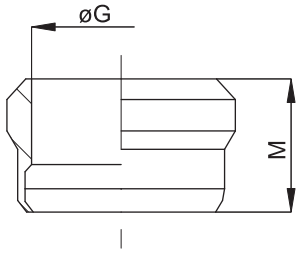

Ogive

Code	Item	Tube ø	ø G	M
027271	OX 22 06 06	6	6	9,5
027272	OX 22 08 08	8	8	9,5
027273	OX 22 10 10	10	10	10
027274	OX 22 12 12	12	12	10
027275	OX 22 14 14	14	14	10
027276	OX 22 15 15	15	15	10
027277	OX 22 16 16	16	16	9,5
027278	OX 22 18 18	18	18	9,5

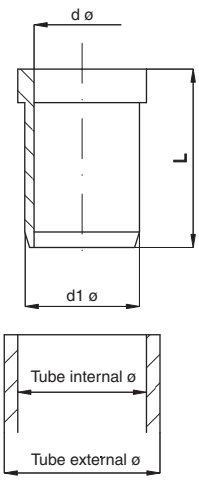

Tube insert

Code	Item	Tube ø extern. x thickness	Tube intern. ø	ø d	ø d_1	L
027293	OX 23 06 06	6x1	4	2,6	3,8	15,5
027290	OX 23 08 08	8x1	6	4,6	5,8	15,5
027291	OX 23 10 10	10x1	8	6,6	7,8	16,5
027292	OX 23 12 12	12x1	10	8,6	9,8	16,5
027294	OX 23 14 14	14x1	13	11,2	12,8	17
027295	OX 23 15 15	15x1,5	12	10,2	11,8	17
027296	OX 23 16 16	16x1	16	14,2	15,8	17,5
027297	OX 23 18 18	18x1,5	15	13,2	14,8	17,5

Stainless Steel standard fittings

Series AX, in AISI 316

Version	Type	Version	Type
M-F BSPT reducer	AX002	Female plug	AX010
M-F BSPT stem increaser	AX004	Nut	AX013
BSPT nipple	AX006	BSPT - hose adapter	AX015
BSPT reducing nipple	AX027	BSP female union	AX032
Threaded nipple	AX028	M-F BSP union	AX033
Solder fitting	AX029	BSP 45°, female elbow	AX034
BSPT extended nipple	AX030	F-F elbow	AX021
Female socket	AX007	M-F elbow	AX022
Female reducing socket	AX031	F-F-F tee	AX023
Male BSPT plug	AX016	F-F-F-F +	AX026

Series of standard fittings in stainless steel AISI 316 available in various configurations to adapt the connections of every installation according to one's requirements.
Available with Gas taper threads (BSPT) and fit for pneumatic, hydraulic (low pressure) and hydropneumatic installations, for alimentary, chemical, medical fields etc..

* How to order: AX0061212

AX006	12	12
Type	Thread	Thread

* For standard items, codes and dimensions see tables from page 5.165.2

Threads	1/8"	1/4"	3/8"	1/2"	3/4"	1"	1 1/4"	1 1/2"	2"	2 1/2"	3"	4"
Code	18	14	38	12	34	01	41	21	02	22	03	04

Technical data	
Fluid	Compressed air, aggressive fluids, oil at low pressure
Pressure	60 bar
Taper threads	UNI - ISO 7 / 1 (BSPT)
Materials	Stainless steel AISI 316 TI

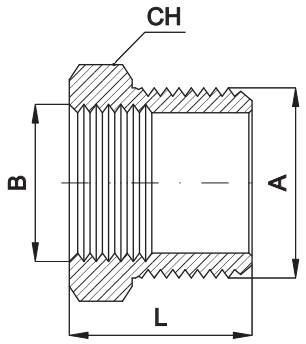

M-F BSPT reducer

Code	Item	A	B	L	CH
026161	AX002 14 18	1/4”	1/8”	18	14
026163	AX002 38 18	3/8”	1/8”	20	17
026162	AX002 38 14	3/8”	1/4”	20	17
026165	AX002 12 38	1/2”	3/8”	23	22
026164	AX002 12 14	1/2”	1/4”	23	22
026166	AX002 34 38	3/4”	3/8”	27	27
026167	AX002 34 12	3/4”	1/2”	27	27
026168	AX002 01 12	1”	1/2”	30	36
026169	AX002 01 34	1”	3/4”	30	36
026170	AX002 41 34	1 1/4”	3/4”	31	42
026171	AX002 41 01	1 1/4”	1”	31	42
026172	AX002 21 01	1 1/2”	1”	33	50
026173	AX002 21 41	1 1/2”	1 1/4”	33	50
026174	AX002 02 41	2”	1 1/4”	37	60
026175	AX002 02 21	2”	1 1/2”	37	60
026176	AX002 22 21	2 1/2”	1 1/2”	43	77
026177	AX002 22 02	2 1/2”	2”	43	77
026178	AX002 03 02	3”	2”	48	90
026179	AX002 03 22	3”	2 1/2”	48	90

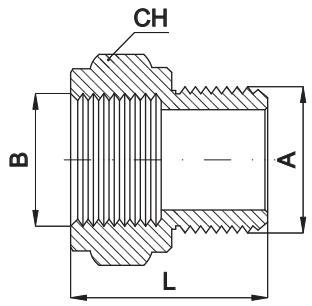

M-F BSPT stem increaser

Code	Item	B	A	CH	L
026251	AX004 18 18	1/8”	1/8”	17	21
026252	AX004 14 18	1/4”	1/8”	19	24
026253	AX004 14 14	1/4”	1/4”	19	27
026254	AX004 38 18	3/8”	1/8”	24	25
026255	AX004 38 14	3/8”	1/4”	24	28
026256	AX004 38 38	3/8”	3/8”	24	31
026257	AX004 12 14	1/2”	1/4”	30	30
026258	AX004 12 38	1/2”	3/8”	30	33
026259	AX004 12 12	1/2”	1/2”	24	40
026260	AX004 34 14	3/4”	1/4”	36	31
026261	AX004 34 38	3/4”	3/8”	36	34
026262	AX004 34 12	3/4”	1/2”	36	35
026263	AX004 34 34	3/4”	3/4”	36	37
026264	AX004 01 38	1”	3/8”	41	37
026265	AX004 01 12	1”	1/2”	41	38
026266	AX004 01 34	1”	3/4”	41	40
026267	AX004 01 01	1”	1”	41	41
026268	AX004 41 34	1 1/4”	3/4”	50	40
026269	AX004 41 01	1 1/4”	1”	50	41
026270	AX004 41 41	1 1/4”	1 1/4”	50	44
026271	AX004 21 34	1 1/2”	3/4”	55	43
026272	AX004 21 01	1 1/2”	1”	55	44
026273	AX004 21 41	1 1/2”	1 1/4”	55	47
026274	AX004 21 41	1 1/2”	1 1/2”	55	53

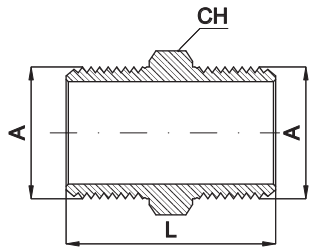

BSPT nipple

Code	Item	A	A	L	CH
026131	AX006 18 18	1/8”	1/8”	24	12
026132	AX006 14 14	1/4”	1/4”	29	14
026133	AX006 38 38	3/8”	3/8”	32	17
026134	AX006 12 12	1/2”	1/2”	38	22
026135	AX006 34 34	3/4”	3/4”	45	27
026136	AX006 01 01	1”	1”	47	36
026137	AX006 41 41	1 1/4”	1 1/4”	52	42
026138	AX006 21 21	1 1/2”	1 1/2”	55	50
026139	AX006 02 02	2”	2”	62	60
026140	AX006 22 22	2 1/2”	2 1/2”	71	77
026141	AX006 03 03	3”	3”	82	90

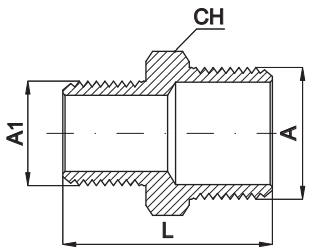

BSPT reducing nipple

Code	Item	A	A_1	L	CH
026091	AX027 14 18	1/4”	1/8”	27	14
026092	AX027 38 14	3/8”	1/4”	31	17
026093	AX027 12 14	1/2”	1/4”	34	22
026094	AX027 12 38	1/2”	3/8”	35	22
026095	AX027 34 38	3/4”	3/8”	38	27
026096	AX027 34 12	3/4”	1/2”	42	27
026097	AX027 01 12	1”	1/2”	45	36
026098	AX027 01 34	1”	3/4”	48	36
026099	AX027 41 34	1 1/4”	3/4”	49	42
026100	AX027 41 01	1 1/4”	1”	51	42
026101	AX027 21 01	1 1/2”	1”	53	50
026102	AX027 21 41	1 1/2”	1 1/4”	54	50
026103	AX027 02 41	2”	1 1/4”	58	60
026104	AX027 02 21	2”	1 1/2”	59	60
026105	AX027 22 21	2 1/2”	1 1/2”	67	77
026106	AX027 22 02	2 1/2”	2”	70	77
026107	AX027 03 22	3”	2 1/2”	78	90

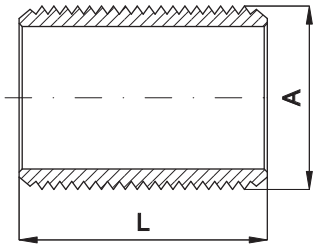

Threaded nipple

Code	Item	A	L
026001	AX028 18 18	1/8”	16
026002	AX028 14 14	1/4”	18
026003	AX028 38 38	3/8”	22
026004	AX028 12 12	1/2”	25
026005	AX028 34 34	3/4”	30
026006	AX028 01 01	1”	35
026007	AX028 41 41	1 1/4”	38
026008	AX028 21 21	1 1/2”	38
026009	AX028 02 02	2”	45
026010	AX028 22 22	2 1/2”	55
026011	AX028 03 03	3”	60

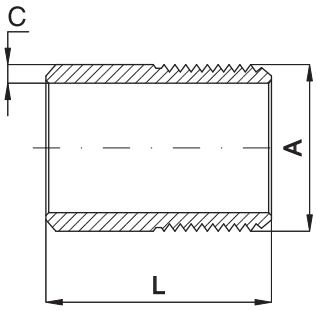

Solder fitting

Code	Item	A	L	C
026031	AX029 18 18	1/8”	20	2,24
026032	AX029 14 14	1/4”	22	2,24
026033	AX029 38 38	3/8”	25	2,31
026034	AX029 12 12	1/2”	28	2,90
026035	AX029 34 34	3/4”	35	2,90
026036	AX029 01 01	1”	35	3,38
026037	AX029 41 41	1 1/4”	45	3,56
026038	AX029 21 21	1 1/2”	45	3,68
026039	AX029 02 02	2”	50	3,91
026040	AX029 22 22	2 1/2”	55	6,30
026041	AX029 03 03	3”	65	4
026042	AX029 04 04	4”	75	4,5

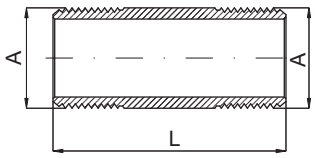

BSPT extended nipple

Code	Item	A	A	L
026061	AX030 18 18	1/8”	1/8”	30
026062	AX030 14 14	1/4”	1/4”	36
026063	AX030 38 38	3/8”	3/8”	42
026064	AX030 12 12	1/2”	1/2”	45
026065	AX030 34 34	3/4”	3/4”	53
026066	AX030 01 01	1”	1”	60
026067	AX030 41 41	1 1/4”	1 1/4”	66
026068	AX030 21 21	1 1/2”	1 1/2”	67
026069	AX030 02 02	2”	2”	75
026070	AX030 22 22	2 1/2”	2 1/2”	85
026071	AX030 03 03	3”	3”	90

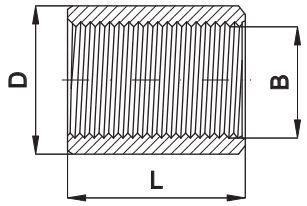

Female socket

Code	Item	B	L	D
026511	AX007 18 18	1/8”	20	14
026512	AX007 14 14	1/4”	22	17,2
026513	AX007 38 38	3/8”	25	21,3
026514	AX007 12 12	1/2”	30	26,7
026515	AX007 34 34	3/4”	35	33,4
026516	AX007 01 01	1”	37	40
026517	AX007 41 41	1 1/4”	42	48,3
026518	AX007 21 21	1 1/2”	42	57
026519	AX007 02 02	2”	46	71
026520	AX007 22 22	2 1/2”	65	90
026521	AX007 03 03	3”	70	100
026522	AX007 04 04	4”	70	120

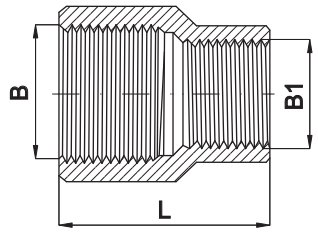

Female reducing socket

Code	Item	B	B_1	L
026541	AX031 14 18	1/4”	1/8”	27
026542	AX031 38 14	3/8”	1/4”	30
026543	AX031 12 14	1/2”	1/4”	36
026544	AX031 12 38	1/2”	3/8”	36
026545	AX031 34 38	3/4”	3/8”	39
026546	AX031 34 12	3/4”	1/2”	39
026547	AX031 01 12	1”	1/2”	45
026548	AX031 01 34	1”	3/4”	45
026549	AX031 41 34	1 1/4”	3/4”	50
026550	AX031 41 01	1 1/4”	1”	50
026551	AX031 21 01	1 1/2”	1”	55
026552	AX031 21 41	1 1/2”	1 1/4”	55
026553	AX031 02 41	2”	1 1/4”	65
026554	AX031 02 21	2”	1 1/2”	65
026555	AX031 22 21	2 1/2”	1 1/2”	74
026556	AX031 22 02	2 1/2”	2”	74
026557	AX031 03 02	3”	2”	80
026558	AX031 03 22	3”	2 1/2”	80

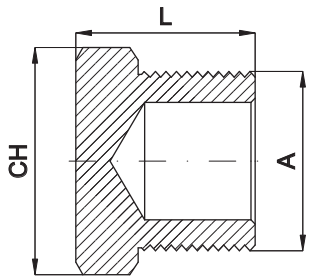

Male BSPT plug

Code	Item	A	L	CH
026191	AX016 18 18	1/8”	15	12
026192	AX016 14 14	1/4”	17	14
026193	AX016 38 38	3/8”	18	17
026194	AX016 12 12	1/2”	20	22
026195	AX016 34 34	3/4”	25	27
026196	AX016 01 01	1”	28	36
026197	AX016 41 41	1 1/4”	31	42
026198	AX016 21 21	1 1/2”	33	50
026199	AX016 02 02	2”	38	60
026200	AX016 22 22	2 1/2”	43	77
026201	AX016 03 03	3”	48	90

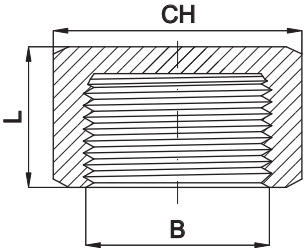

Female plug

Code	Item	B	L	CH
026671	AX010 18 18	1/8”	13	17
026672	AX010 14 14	1/4”	15	19
026673	AX010 38 38	3/8”	16	24
026674	AX010 12 12	1/2”	18	30
026675	AX010 34 34	3/4”	21	36
026676	AX010 01 01	1”	24	41
026677	AX010 41 41	1 1/4”	24	50
026678	AX010 21 21	1 1/2”	24	55
026679	AX010 02 02	2”	26	68
026680	AX010 22 22	2 1/2”	30	84
026681	AX010 03 03	3”	30	98

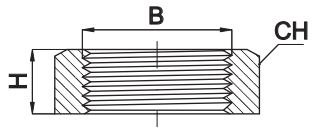

Nut

Code	Item	B	H	CH
026641	AX013 18 18	1/8”	6	19
026642	AX013 14 14	1/4”	6	22
026643	AX013 38 38	3/8”	7	27
026644	AX013 12 12	1/2”	8	32
026645	AX013 34 34	3/4”	9	36
026646	AX013 01 01	1”	10	46
026647	AX013 41 41	1 1/4”	11	55
026648	AX013 21 21	1 1/2”	12	60
026649	AX013 02 02	2”	13	75
026650	AX013 22 22	2 1/2”	16	95
026651	AX013 03 03	3”	19	105

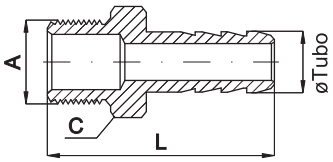

BSPT - hose adapter

Code	Item	ø Tubo	A	L	CH
026711	AX015 07 18	7	1/8”	35	12
026712	AX015 09 14	9	1/4”	38	14
026713	AX015 11 38	11	3/8”	44	19
026714	AX015 15 12	15	1/2”	48	22
026715	AX015 21 34	21	3/4”	58	27
026716	AX015 27 01	27	1”	61	36
026717	AX015 34 41	34	1 1/4”	70	46
026718	AX015 40 21	40	1 1/2”	73	50
026719	AX015 52 02	52	2”	81	60

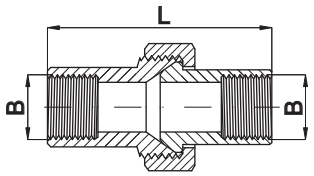

BSP female union

Code	Item	B	B	L
026741	AX032 18 18	1/8”	1/8”	30
026742	AX032 14 14	1/4”	1/4”	34
026743	AX032 38 38	3/8”	3/8”	38
026744	AX032 12 12	1/2”	1/2”	41
026745	AX032 34 34	3/4”	3/4”	48
026746	AX032 01 01	1”	1”	52
026747	AX032 41 41	1 1/4”	1 1/4”	54
026748	AX032 21 21	1 1/2”	1 1/2”	59
026749	AX032 02 02	2”	2”	67
026750	AX032 22 22	2 1/2”	2 1/2”	78
026751	AX032 03 03	3”	3”	94

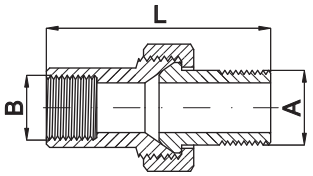

M-F BSP union

Code	Item	A	B	L
026801	AX033 18 18	1/8”	1/8”	42
026802	AX033 14 14	1/4”	1/4”	42
026803	AX033 38 38	3/8”	3/8”	49
026804	AX033 12 12	1/2”	1/2”	56
026805	AX033 34 34	3/4”	3/4”	63
026806	AX033 01 01	1”	1”	69
026807	AX033 41 41	1 1/4”	1 1/4”	74
026808	AX033 21 21	1 1/2”	1 1/2”	84
026809	AX033 02 02	2”	2”	102

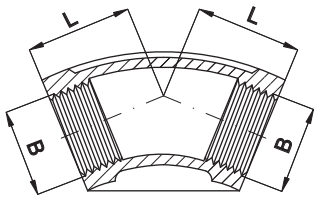

BSP 45°, female elbow

Code	Item	B	B	L
026311	AX034 18 18	1/8”	1/8”	17
026312	AX034 14 14	1/4”	1/4”	19
026313	AX034 38 38	3/8”	3/8”	20
026314	AX034 12 12	1/2”	1/2”	22
026315	AX034 34 34	3/4”	3/4”	25
026316	AX034 01 01	1”	1”	28
026317	AX034 41 41	1 1/4”	1 1/4”	33
026318	AX034 21 21	1 1/2”	1 1/2”	36
026319	AX034 02 02	2”	2”	43
026320	AX034 22 22	2 1/2”	2 1/2”	50
026321	AX034 03 03	3”	3”	56

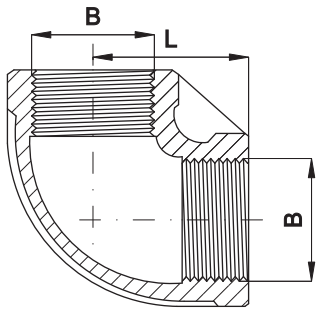

F-F elbow

Code	Item	B	B	L
026291	AX021 18 18	1/8”	1/8”	19
026292	AX021 14 14	1/4”	1/4”	21
026293	AX021 38 38	3/8”	3/8”	25
026294	AX021 12 12	1/2”	1/2”	28
026295	AX021 34 34	3/4”	3/4”	33
026296	AX021 01 01	1”	1”	38
026297	AX021 41 41	1 1/4”	1 1/4”	45
026298	AX021 21 21	1 1/2”	1 1/2”	50
026299	AX021 02 02	2”	2”	58
026300	AX021 22 22	2 1/2”	2 1/2”	75
026301	AX021 03 03	3”	3”	85

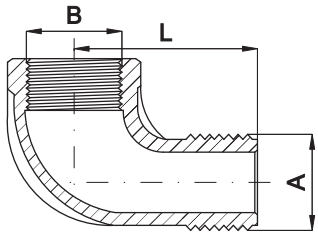

M-F elbow

Code	Item	A	B	L
026391	AX022 18 18	1/8”	1/8”	20
026392	AX022 14 14	1/4”	1/4”	20
026393	AX022 38 38	3/8”	3/8”	24
026394	AX022 12 12	1/2”	1/2”	28
026395	AX022 34 34	3/4”	3/4”	33
026396	AX022 01 01	1”	1”	38
026397	AX022 41 41	1 1/4”	1 1/4”	-
026398	AX022 21 21	1 1/2”	1 1/2”	-
026399	AX022 02 02	2”	2”	-
026400	AX022 22 22	2 1/2”	2 1/2”	-
026401	AX022 03 03	3”	3”	-

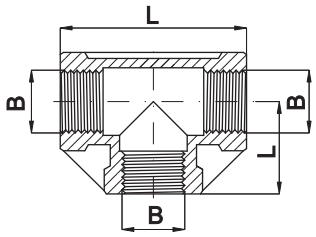

F-F-F tee

Code	Item	B	B	B	L
026421	AX023 18 18	1/8”	1/8”	1/8”	19
026422	AX023 14 14	1/4”	1/4”	1/4”	21
026423	AX023 38 38	3/8”	3/8”	3/8”	25
026424	AX023 12 12	1/2”	1/2”	1/2”	28
026425	AX023 34 34	3/4”	3/4”	3/4”	33
026426	AX023 01 01	1”	1”	1”	38
026427	AX023 41 41	1 1/4”	1 1/4”	1 1/4”	45
026428	AX023 21 21	1 1/2”	1 1/2”	1 1/2”	50
026429	AX023 02 02	2”	2”	2”	58
026430	AX023 22 22	2 1/2”	2 1/2”	2 1/2”	75
026431	AX023 03 03	3”	3”	3”	85

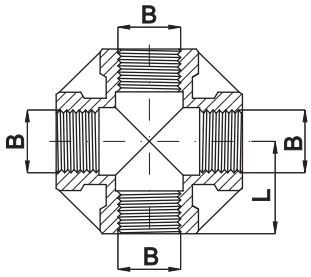

F-F-F-F +

Code	Item	B	B	B	B	L
026481	AX026 18 18	1/8”	1/8”	1/8”	1/8”	20
026482	AX026 14 14	1/4”	1/4”	1/4”	1/4”	24
026483	AX026 38 38	3/8”	3/8”	3/8”	3/8”	24
026484	AX026 12 12	1/2”	1/2”	1/2”	1/2”	28
026485	AX026 34 34	3/4”	3/4”	3/4”	3/4”	33
026486	AX026 01 01	1”	1”	1”	1”	38
026487	AX026 41 41	1 1/4”	1 1/4”	1 1/4”	1 1/4”	45
026488	AX026 21 21	1 1/2”	1 1/2”	1 1/2”	1 1/2”	49
026489	AX026 02 02	2”	2”	2”	2”	57

Stainless Steel quick-lock couplings

Series GXA, from DN 6 to DN 25

Version	Code	Item
Coupling 1/4” F, DN 6	570836	GXA1014F
Plug 1/4” F, DN 6	570837	GXA2014F
Coupling 3/8” F, DN 9	570838	GXA1038F
Plug 3/8” F, DN 9	570839	GXA2038F
Coupling 1/2” F, DN 13	570840	GXA1012F
Plug 1/2” F, DN 13	570841	GXA2012F
Coupling 3/4” F, DN 19	570842	GXA1034F
Plug 3/4” F, DN 19	570843	GXA2034F
Coupling 1” F, DN 25	570844	GXA1100F
Plug 1” F, DN 25	570845	GXA2100F

STAINLESS STEEL

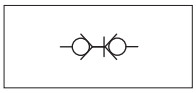

Series of stainless steel AISI 316 quick-lock couplings, double shut off.
Conforming to ISO 7241-1 “A” suitable for use in aggressive environments like the chemical field and the food industry.
The connection tightness between the coupling and the plug is guaranteed by a series of spheres and this allows a longer life time even when the connections and the disconnections are frequent.
For standard items, codes and dimensions see tables from page 5.170.2.

On request, they can be supplied according Directive 94/9/EC - **ATEX**
CE Ex **II 3 GDc T5**

Technical data			
Fluid	Compressed air, gas, acids, fluids		
Pressure range	1/4” = 300 bar	3/8”-1/2”-3/4” = 250 bar	1” = 200 bar
Temperature range	-20 °C ÷ +150 °C		
Parallel threads	UNI - ISO 228		
Materials	Coupler body and internal parts, all in stainless steel AISI 316 Seals: FKM		

5

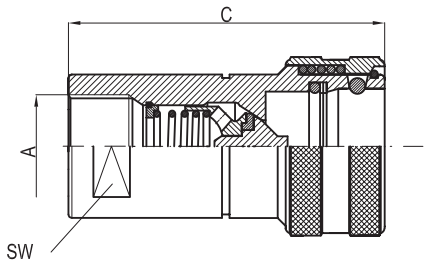

Coupling GXA1

Code	Item	A	C	SW
570836	GXA1014F	1/4”	-	-
570838	GXA1038F	3/8”	-	-
570840	GXA1012F	1/2”	-	-
570842	GXA1034F	3/4”	-	-
570844	GXA1100F	1”	-	-

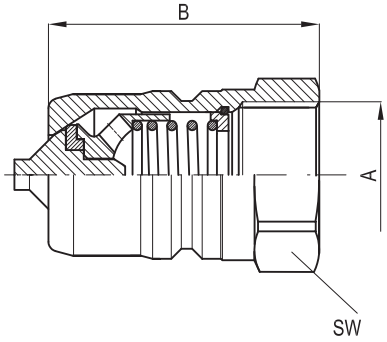

Plug GXA2

Code	Item	A	B	SW
570837	GXA2014F	1/4”	-	-
570839	GXA2038F	3/8”	-	-
570841	GXA2012F	1/2”	-	-
570843	GXA2034F	3/4”	-	-
570845	GXA2100F	1”	-	-

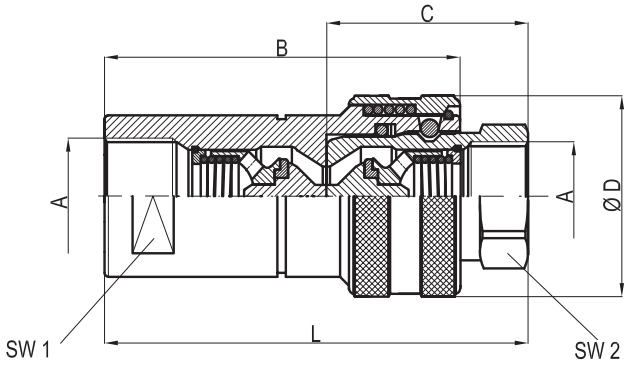

Group coupling-plug

A	B	C	D	L	SW_1	SW_2
1/4”	50	34	26	70	19	19
3/8”	57	40	30	80	22	22
1/2”	70	46	38	95	27	27
3/4”	81	53,5	48	108	34	32
1”	96	63	54	126	38	41

Stainless Steel quick-lock couplings

Series GXF, from DN 6 to DN 30

Version	Code	Item
Coupling 1/4” F, DN 6	570846	GXF1014F
Plug 1/4” F, DN 6	570847	GXF2014F
Coupling 3/8” F, DN 9	570848	GXF1038F
Plug 3/8” F, DN 9	570849	GXF2038F
Coupling 1/2” F, DN 13	570850	GXF1012F
Plug 1/2” F, DN 13	570851	GXF2012F
Coupling 3/4” F, DN 19	570852	GXF1034F
Plug 3/4” F, DN 19	570853	GXF2034F
Coupling 1” F, DN 25	570854	GXF1100F
Plug 1” F, DN 25	570855	GXF2100F
Coupling 1-1/2” F, DN 30	570856	GXF1114F
Plug 1-1/2” F, DN 30	570857	GXF2114F

STAINLESS STEEL

Series of stainless steel AISI 316 quick-lock couplings, “flat face” double shut off without exit of fluid at the moment of disconnection.
Conforming to ISO 16028 for use in aggressive environments like the chemical field and the food industry and on those use where it is important that there is not exit of fluid.
The connection tightness between the coupling and the plug is guaranteed by a series of spheres and this allows a longer life time even when the connections and the disconnections are frequent.
For standard items, codes and dimensions see tables from page 5.172.2.

On request, they can be supplied according Directive 94/9/EC - **ATEX**
II 3 GDc T5

Technical data					
Fluid	Compressed air, gas, acids, fluids				
Pressure range	1/4” = 300 bar	3/8”-1/2” = 250 bar	3/4” = 200 bar	1” = 150 bar	11/4” = 100 bar
Temperature range	-20 °C ÷ +150 °C				
Parallel threads	UNI - ISO 228				
Materials	Coupler body and internal parts, all in stainless steel AISI 316 Seals: FKM				

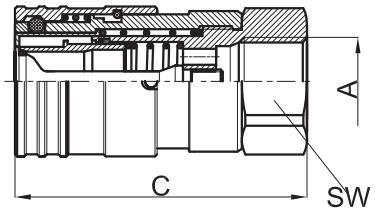

Coupling GXF1

Code	Item	A	C	SW
570846	GXF1014F	1/4”	48	22
570848	GXF1038F	3/8”	68	27
570850	GXF1012F	1/2”	74	32
570852	GXF1034F	3/4”	79	36
570854	GXF1100F	1”	93	45
570856	GXF1114F	1 1/4”	106	55

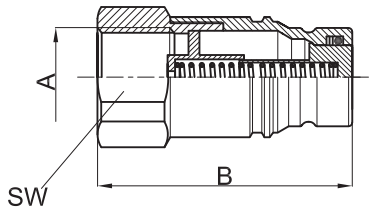

Plug GXF2

Code	Item	A	B	SW
570847	GXF2014F	1/4”	48	22
570849	GXF2038F	3/8”	67	27
570851	GXF2012F	1/2”	68	32
570853	GXF2034F	3/4”	70	36
570855	GXF2100F	1”	82	45
570857	GXF2114F	1 1/4”	90	55

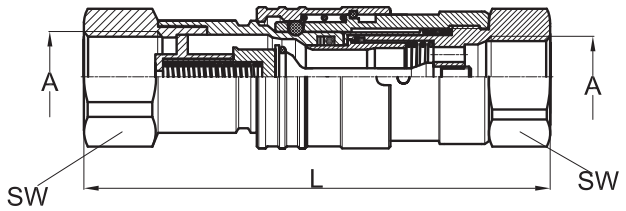

Group coupling-plug

A	L	SW
1/4”	86	22
3/8”	118	27
1/2”	125	32
3/4”	130	36
1”	153	45
1 1/4”	172,5	55

Stainless Steel swivel joints, in line and 90°

Series GGLX - GGAX, from DN 6 to DN 50

Version	Code	Item
In line 1/4” MF, DN 6	570858	GGLX014
In line 3/8” MF, DN 9	570859	GGLX038
In line 1/2” MF, DN 13	570860	GGLX012
In line 3/4” MF, DN 19	570861	GGLX034
In line 1” MF, DN 25	570862	GGLX100
In line 1 1/4” MF, DN 30	570863	GGLX114
In line 1 1/2” MF, DN 40	570864	GGLX112
In line 2” MF, DN 50	570865	GGLX200
90° 1/4” MF, DN 6	570866	GGAX014
90° 3/8” MF, DN 9	570867	GGAX038
90° 1/2” MF, DN 13	570868	GGAX012
90° 3/4” MF, DN 19	570869	GGAX034
90° 1” MF, DN 25	570870	GGAX100
90° 1 1/4” MF, DN 30	570871	GGAX114
90° 1 1/2” MF, DN 40	570872	GGAX112
90° 2” MF, DN 50	570873	GGAX200

STAINLESS STEEL

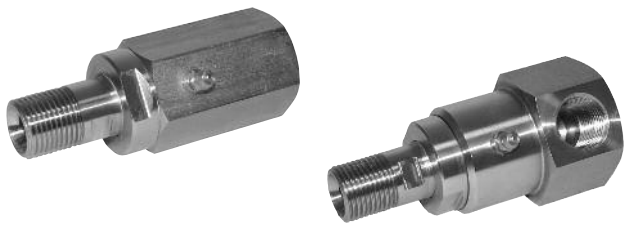

Series of stainless steel swivel joints in line and 90°.
They are used to connect two rotating elements, avoiding twists.
For standard items, codes and dimensions see tables from page 5.175.2.

EX

On request, they can be supplied according Directive 94/9/EC - **ATEX**
CE Ex **II 3 GDc T5**

Technical data					
Fluid	Compressed air, gas, acids, fluids				
Pressure range	GGLX: 1/4”- 3/8” = 300 bar	1/2” = 300 bar	3/4”-1” = 250 bar	1 1/4” = 180 bar	1 1/2”-2” = 150 bar
	GGAX: 1/4” = 350 bar	3/8-1/2” = 300 bar	3/4”-1” = 250 bar	1 1/4” = 180 bar	1 1/2”-2” = 150 bar
Temperature range	-20 °C ÷ +150 °C				
Parallel threads	UNI - ISO 228				
Max speed of rotation	10 turns / minute				
Materials	Coupler body and internal parts, all in stainless steel AISI 316 Seals: FKM				

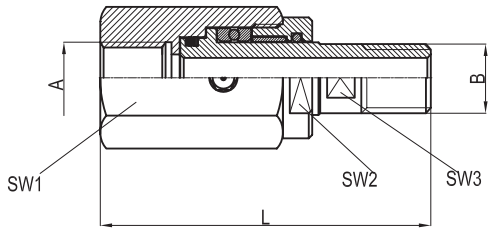

In line swivel joint GGLX

Code	Item	A	B	L	SW_1	SW_2	SW_3
570858	GGLX014	1/4”	1/4”	75	27	24	11
570859	GGLX038	3/8”	3/8”	88	34	30	14
570860	GGLX012	1/2”	1/2”	101	36	32	18
570861	GGLX034	3/4”	3/4”	110	46	40	24
570862	GGLX100	1”	1”	124	55	50	30
570863	GGLX114	1 1/4”	1 1/4”	129	60	55	38
570864	GGLX112	1 1/2”	1 1/2”	138	75	69	41
570865	GGLX200	2”	2”	149	85	80	55

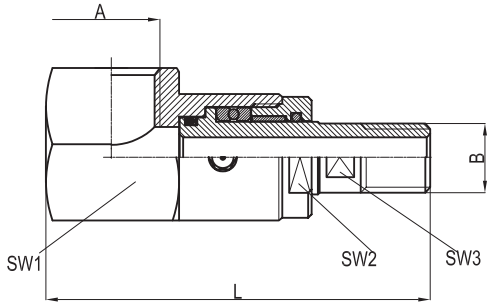

90° swivel joint GGAX 1/4” ÷ 1”

Code	Item	A	B	L	SW_1	SW_2	SW_3
570866	GGAX014	1/4”	1/4”	78	32	21	11
570867	GGAX038	3/8”	3/8”	98	36	27	14
570868	GGAX012	1/2”	1/2”	106	46	32	18
570869	GGAX034	3/4”	3/4”	118	50	37	24
570870	GGAX100	1”	1”	142	60	46	30

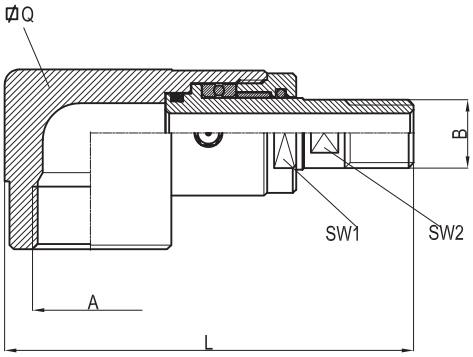

90° swivel joint GGAX 1 1/4” ÷ 2”

Code	Item	A	B	L	Q	SW_1	SW_2
570871	GGAX114	1 1/4”	1 1/4”	155	60	55	38
570872	GGAX112	1 1/2”	1 1/2”	170	75	70	41
570873	GGAX200	2”	2”	190	85	80	55

Air-reservoirs

According to EC Directive 97/23

Version	Code	Item
5 lt 4 connections	050612	5SBCX4
12 lt 4 connections	050613	12SBCX4
24 lt 4 connections	050614	24SBCX4

STAINLESS STEEL

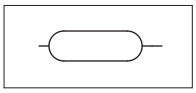

Keep to the use and maintenance manual supplied together with each reservoir.

On request, they can be supplied according Directive 94/9/EC - **ATEX**
CE Ex **II 2 GDc T5**

Series of stainless steel air-reservoirs for compressed air built according to EC directive 97/23 about equipment under pressure.
Every air-reservoir is supplied with Certificate of Conformity and manual instructions.
For standard items, codes and dimensions see tables from page 5.180.2.
On request, safety valves in stainless steel can be supplied.
For pressure-gauges with stainless steel cover see page xxx

Technical data	
Fluid	Compressed air
Pressure range	11 bar max
Hydrostatic test pressure	16,5 bar
Temperature range	-40 °C ÷ +50 °C
Threads	Cilindriche UNI - ISO 228/1
Materials	Stainless steeel AISI 304, polished

type: **5SBCX4**

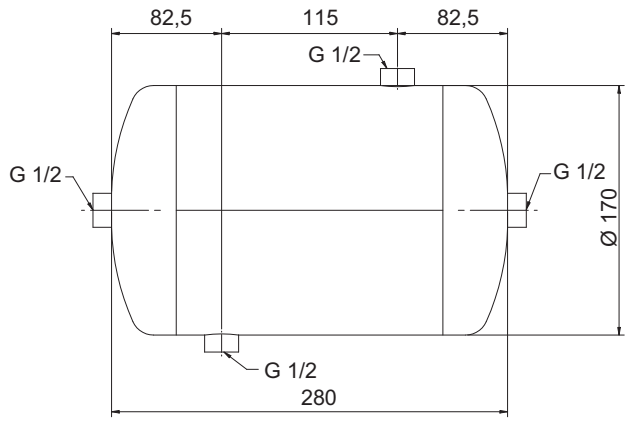

Code	Item	N° connections
050612	5SBCX4	4

type: **12SBCX4**

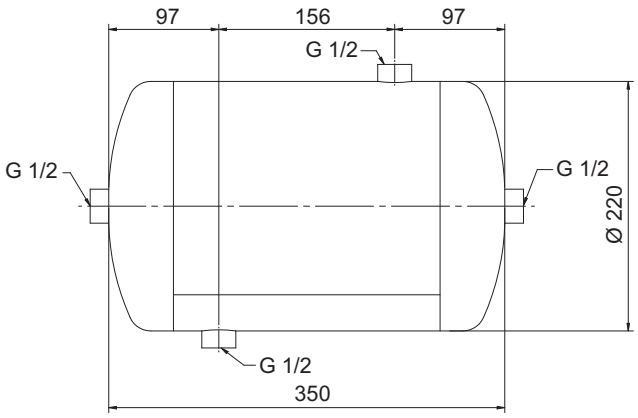

Code	Item	N° connections
050613	12SBCX4	4

type: **24SBCX4**

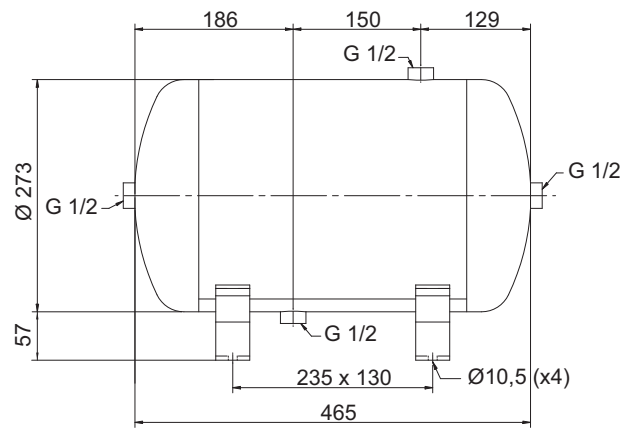

Code	Item	N° connections
050614	24SBCX4	4

Version	Symbol	Type
Mounting bracket		STSBX
Bracket/tank connection fitting		AX0041212

Series of accessories for the mounting (bracket and fitting) of the reservoirs.

type: **STSBX**

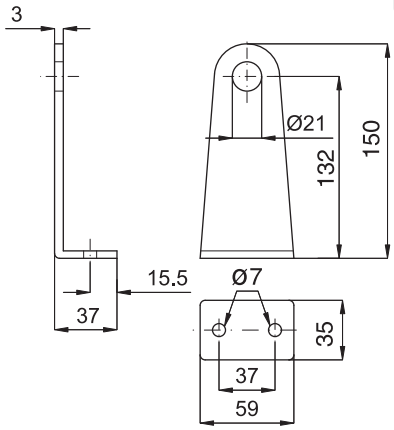

Code	Item
050628	STSBX

Material: Stainless steel AISI 304

type: **AX0041212**

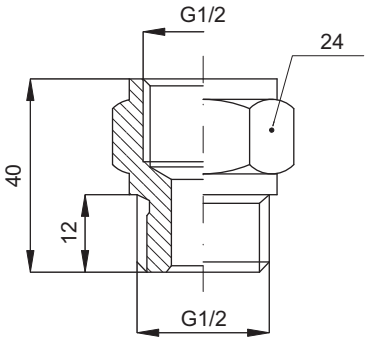

Code	Item
026259	AX0041212

Material: Stainless steel AISI 316

Notes

Stainless Steel flow controls

In line, for cylinders

Version	Type
Unidirectional in line with female-female thread	VX52
Bi-directional in line with female-female thread	VX53
Exagonal screw adjustment	VX15
For cylinder, swivel with screwdriver adjustment and push-in fitting	VX18

For the coupling of the screw adjustment type VX15 with stainless steel single banjo, see banjo type RX35 at page 5.150.5

Series of stainless steel flow controls available either for in line applications and for direct connection to cylinders to control the translation velocity.
The in line regulators are available for control in one way (unidirectional) or in both ways (bi-directional).
The regulators for cylinders can be unidirectional with outlet adjustment from the cylinder (C) or with inlet adjustment to the cylinder (V), and in both sides (B).
For standard items, codes and dimensions see tables at page 5.185.2.

Flow diagrams

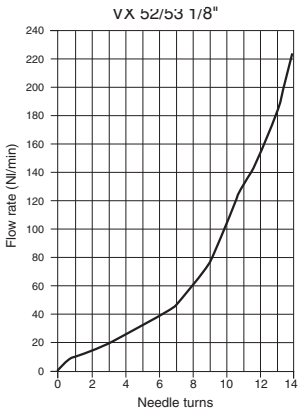

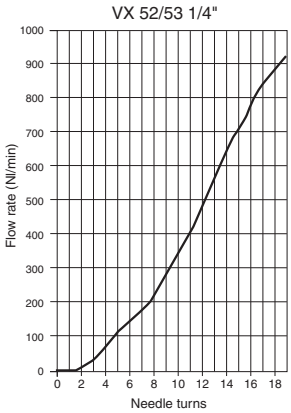

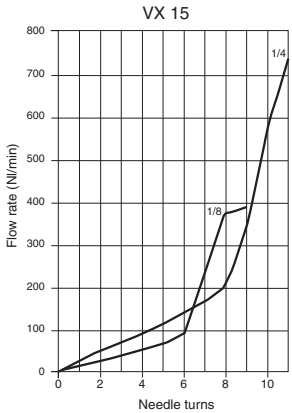

Technical data	
Fluid	Compressed filtered air with or without lubrication
Pressure range	0,5 ÷ 10 bar
Temperature range	-20 °C ÷ 150 °C
Threads	UNI - ISO 228
Materials	Body: Stainless steel AISI 316 L Adjustment group: Stainless steel AISI 316 L Seals: FKM Washer: PTFE

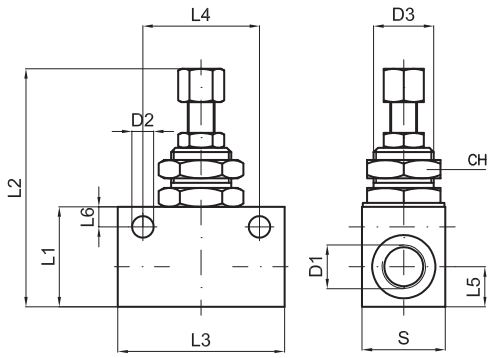

Unidirectional in line with female-female thread

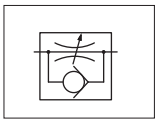

Code	Item	D_1	D_2	D_3	L_1	L_2 max	L_3	L_4	L_5	S	CH	Weight gr
030155	VX52 18 18	1/8”	4,5	12x0,75	21	56	34	24	8	16	15	50
030156	VX52 14 14	1/4”	6,5	18x1,5	30	75	50	35	12	25	22	160

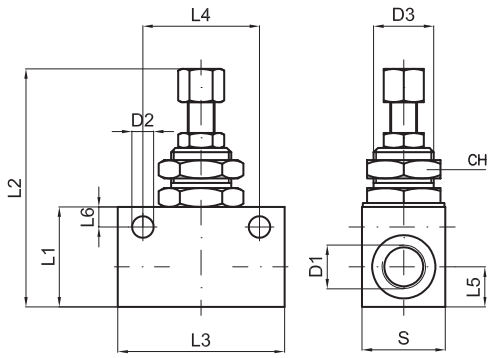

Bi-directional in line with female-female thread

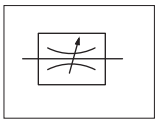

Code	Item	D_1	D_2	D_3	L_1	L_2 max	L_3	L_4	L_5	S	CH	Weight gr
030157	VX53 18 18	1/8”	4,5	12x0,75	21	56	34	24	8	16	15	50
030158	VX53 14 14	1/4”	6,5	18x1,5	30	75	50	35	12	25	22	160

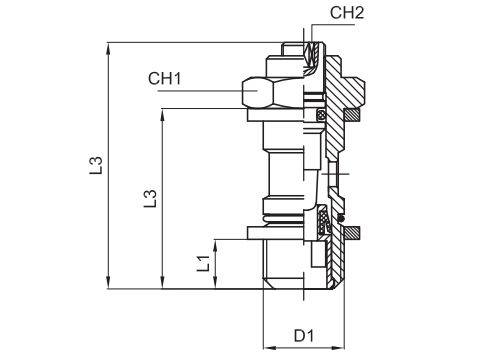

Exagonal screw adjustment

For cylinder

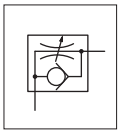

Code	Item	D_1	L_1	L_2	L_3 max	CH_1	CH_2	Weight gr
024035	VX15 00 18C	1/8”	5,5	25	36	14	2,5	16
024036	VX15 00 14C	1/4”	6,5	27,5	42	17	3	30

Bi directional

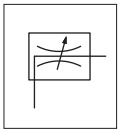

Code	Item	D_1	L_1	L_2	L_3 max	CH_1	CH_2	Weight gr
024037	VX15 00 18B	1/8”	5,5	25	36	14	2,5	16
024038	VX15 00 14B	1/4”	6,5	27,5	42	17	3	30

For valve

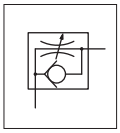

Code	Item	D_1	L_1	L_2	L_3 max	CH_1	CH_2	Weight gr
024039	VX15 00 18V	1/8”	5,5	25	36	14	2,5	16
024040	VX15 00 14V	1/4”	6,5	27,5	42	17	3	30

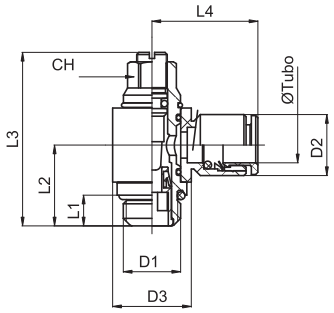

For rotating cylinder with push-in fitting

For cylinder

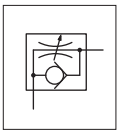

Code	Item	Ø tube	D_1	D_2	L_1	L_2	L_3 max	L_4	CH	Weight gr
022432	VX180418C	4	1/8”	9	5	15.5	32	19,5	9	29
022433	VX180618C	6	1/8”	12	5	15.5	32	22	9	27
022434	VX180614C	6	1/4”	12	6.5	17.5	40	23,5	10	49
022435	VX180818C	8	1/8”	14	5	15.5	32	22,5	9	31
022436	VX180814C	8	1/4”	14	6.5	17.5	40	24	10	49
022437	VX181014C	10	1/4”	16	6.5	17.5	40	26,5	10	53
022438	VX181038C	10	3/8”	16	9	22	52	28	14	86

For valve

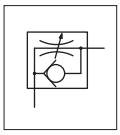

Code	Item	Ø tube	D_1	D_2	L_1	L_2	L_3 max	L_4	CH	Weight gr
022439	VX180418V	4	1/8”	9	5	15.5	32	19,5	9	29
022440	VX180618V	6	1/8”	12	5	15.5	32	22	9	27
022441	VX180614V	6	1/4”	12	6.5	17.5	40	23,5	10	49
022442	VX180818V	8	1/8”	14	5	15.5	32	22,5	9	31
022443	VX180814V	8	1/4”	14	6.5	17.5	40	24	10	49
022444	VX181014V	10	1/4”	16	6.5	17.5	40	26,5	10	53
022445	VX181038V	10	3/8”	16	9	22	52	28	14	86

Bi directional

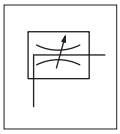

Code	Item	Ø tube	D_1	D_2	L_1	L_2	L_3 max	L_4	CH	Weight gr
022446	VX180418B	4	1/8”	9	5	15.5	32	19,5	9	29
022447	VX180618B	6	1/8”	12	5	15.5	32	22	9	27
022448	VX180614B	6	1/4”	12	6.5	17.5	40	23,5	10	49
022449	VX180818B	8	1/8”	14	5	15.5	32	22,5	9	31
022450	VX180814B	8	1/4”	14	6.5	17.5	40	24	10	49
022451	VX181014B	10	1/4”	16	6.5	17.5	40	26,5	10	53
022452	VX181038B	10	3/8”	16	9	22	52	28	14	86

Flow diagrams

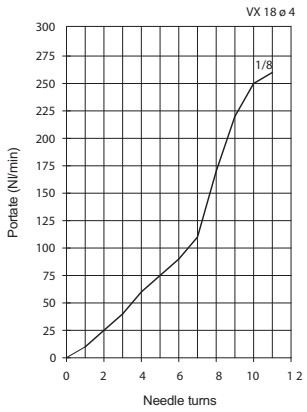

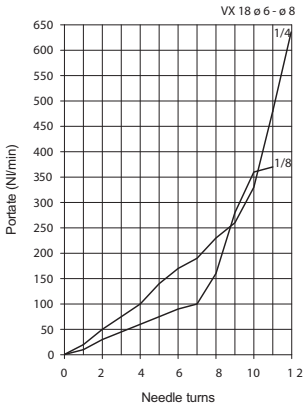

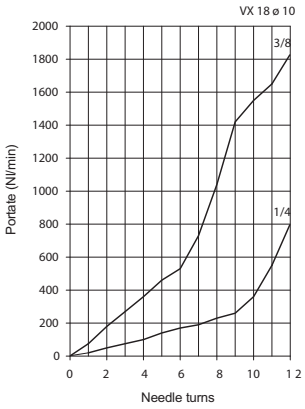

Notes

Stainless Steel silencers and silenced exhaust restrictors

Version	Symbol	Type
Silencer with mesh		AFEX
Conical silencer with hexagonal nut		AEX
Silencer, flat and hexagon nut on nipple		AEPX
Silenced exhaust restrictor with manual adjustment	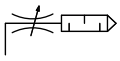	AVRX

Series of stainless steel silencers and silenced exhaust restrictors to be used on the exhausts of valves to reduce the noise. The silenced exhaust restrictors, furthermore, adjust the exhaust speed and therefore the translation velocity of the cylinders.
For standard items, codes and dimensions see tables from page 5.190.2.

Technical data	
Fluid	Compressed air
Pressure range	0 ÷ 10 bar
Temperature range	-40 °C ÷ + 150°C
Parallel threads	UNI - ISO 228
Materials	Stainless steel AISI 304

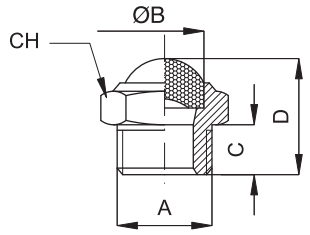

Silencer with mesh

Code	Item	A	B	CH	C	D
010327	AFEXM5	5MA	6,5	8	3,8	9
010321	AFEX18	1/8”	11	13	6	15
010322	AFEX14	1/4”	14	16	8	18
010345	AFEX38	3/8”	17	19	9	19
010346	AFEX12	1/2”	22	24	10	22
010330	AFEX34	3/4”	28	30	10	27
010329	AFEX01	1”	34	36	15	29

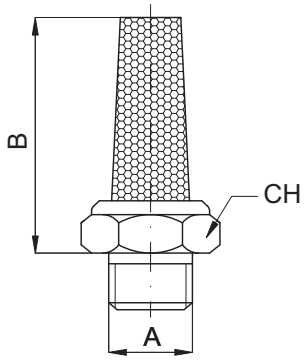

Conical silencer with exagonal nut

Code	Item	A	B	C
010358	AEXM5	M5	16	9
010351	AEX18	1/8”	22	12
010352	AEX14	1/4”	24	15
011033	AEX38	3/8”	30	19
010353	AEX12	1/2”	38.5	23
010354	AEX34	3/4”	47	30
010355	AEX01	1”	56	36

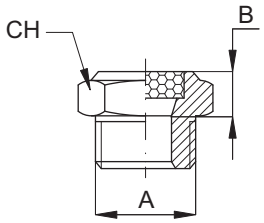

Silencer, flat and hexagon nut on nipple

Code	Item	A	B	CH
010360	AEPXM5	M5	4.5	8
010351	AEPX18	1/8”	6.2	12
010352	AEPX14	1/4”	6.2	15
011033	AEPX38	3/8”	6.7	19
010353	AEPX12	1/2”	9.2	23
010354	AEPX34	3/4”	9.7	30
010355	AEPX01	1”	10.7	36

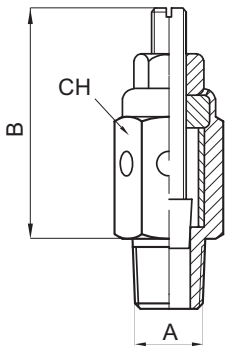

Silenced exhaust restrictors with screwdriver nut

Code	Item	A	B	CH
023518	AVRX18	1/8”	21.5	12
023519	AVRX14	1/4”	28	14
023520	AVRX38	3/8”	26	17
023527	AVRX12	1/2”	32	22
023528	AVRX34	3/4”	36.5	27
023529	AVRX01	1”	36.5	34